US010109204B1

(12) **United States Patent**
Buchmueller et al.

(10) **Patent No.: US 10,109,204 B1**
(45) **Date of Patent: Oct. 23, 2018**

(54) **SYSTEMS AND METHODS FOR UNMANNED AERIAL VEHICLE OBJECT AVOIDANCE**

(71) Applicant: **Amazon Technologies, Inc.**, Seattle, WA (US)

(72) Inventors: **Daniel Buchmueller**, Seattle, WA (US); **Nathan Michael Paczan**, Seattle, WA (US)

(73) Assignee: **Amazon Technologies, Inc.**, Seattle, WA (US)

(*) Notice: Subject to any disclaimer, the term of this patent is extended or adjusted under 35 U.S.C. 154(b) by 0 days.

(21) Appl. No.: **15/482,570**

(22) Filed: **Apr. 7, 2017**

Related U.S. Application Data

(63) Continuation of application No. 14/569,125, filed on Dec. 12, 2014, now Pat. No. 9,761,147.

(51) **Int. Cl.**
G05D 1/08 (2006.01)
G08G 5/00 (2006.01)
G08G 5/04 (2006.01)

(52) **U.S. Cl.**
CPC ***G08G 5/0039*** (2013.01); ***G08G 5/0008*** (2013.01); ***G08G 5/0013*** (2013.01);
(Continued)

(58) **Field of Classification Search**
USPC 701/3
See application file for complete search history.

(56) **References Cited**

U.S. PATENT DOCUMENTS

3,671,927 A 6/1972 Proudian
3,745,520 A 7/1973 Barret et al.
(Continued)

FOREIGN PATENT DOCUMENTS

EP 2177966 4/2010
JP 2004218935 8/2004
(Continued)

OTHER PUBLICATIONS

Office action for U.S. Appl. No. 14/569,233, dated Sep. 26, 2017, Paczan et al., "Commercial and General Aircraft Avoidance using Multi-spectral wave Detection", 12 pages.
(Continued)

Primary Examiner — Tyler D Paige
(74) *Attorney, Agent, or Firm* — Lee & Hayes, PLLC

(57) **ABSTRACT**

This disclosure is directed to a detection and avoidance apparatus for an unmanned aerial vehicle ("UAV") and systems, devices, and techniques pertaining to automated object detection and avoidance during UAV flight. The system may detect objects within the UAV's airspace through acoustic, visual, infrared, multispectral, hyperspectral, or object detectable signal emitted or reflected from an object. The system may identify the source of the object detectable signal by comparing features of the received signal with known sources signals in a database. The features may include, for example, an acoustic signature emitted or reflected by the object. Furthermore, a trajectory envelope for the object may be determined based on characteristic performance parameters for the object such as cursing speed, maneuverability, etc. The UAV may determine an optimized flight plan based on the trajectory envelopes of detected objects within the UAV's airspace.

20 Claims, 11 Drawing Sheets

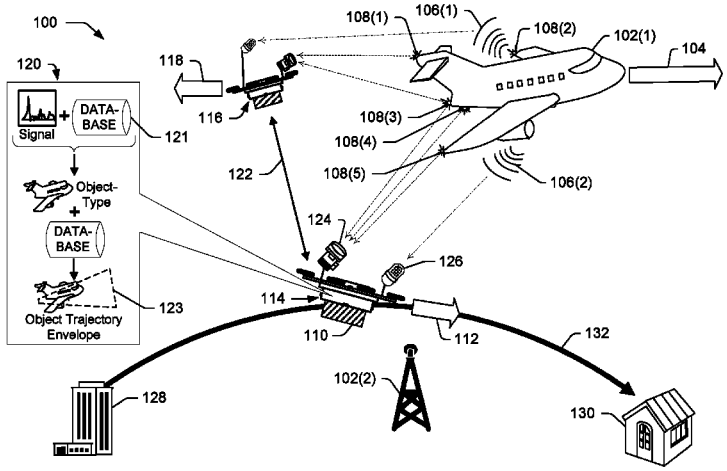

(52) **U.S. Cl.**
CPC ***G08G 5/0021*** (2013.01); ***G08G 5/0069*** (2013.01); ***G08G 5/045*** (2013.01)

(56) **References Cited**

U.S. PATENT DOCUMENTS

5,321,489	A	6/1994	Defour et al.	
5,581,250	A	12/1996	Khvilivitzky	
6,804,607	B1 *	10/2004	Wood	G01S 3/784 180/167
8,897,770	B1	11/2014	Frolov et al.	
9,043,144	B2	5/2015	Mathews et al.	
9,046,372	B2	6/2015	Mathews et al.	
9,074,895	B2	7/2015	Mathews et al.	
9,074,896	B2	7/2015	Mathews et al.	
9,310,222	B1	4/2016	Suiter et al.	
9,671,791	B1	6/2017	Paczan	
9,764,836	B1	9/2017	Elzinga et al.	
9,875,657	B2	1/2018	Collins	
2002/0033769	A1	3/2002	Bass et al.	
2004/0167718	A1	8/2004	Hoenes et al.	
2005/0117454	A1	6/2005	Millikin	
2005/0230563	A1	10/2005	Corcoran, III	
2006/0058931	A1	3/2006	Ariyur et al.	
2009/0257314	A1	10/2009	Davis et al.	
2010/0100269	A1 *	4/2010	Ekhaguere	G05D 1/101 701/26
2010/0114633	A1 *	5/2010	Sislak	G06Q 10/047 701/120
2010/0238956	A1	9/2010	Preuss et al.	
2010/0305857	A1 *	12/2010	Byrne	G06T 7/73 701/301
2011/0106440	A1	5/2011	Adradi	
2011/0137498	A1	6/2011	Suzuki	
2011/0160941	A1	6/2011	Garrec et al.	
2011/0199098	A1	8/2011	Bense et al.	
2011/0299732	A1	12/2011	Jonchery et al.	
2012/0095621	A1 *	4/2012	Zhu	G05D 1/101 701/3
2013/0317669	A1	11/2013	Jiang et al.	
2013/0317673	A1	11/2013	Leroy et al.	
2014/0081505	A1 *	3/2014	Klinger	G08G 1/162 701/25
2014/0202248	A1	7/2014	Read et al.	
2014/0249693	A1 *	9/2014	Stark	B64C 39/024 701/2
2015/0170523	A1 *	6/2015	La Civita	G01C 21/20 701/120
2015/0302858	A1	10/2015	Hearing et al.	
2015/0327136	A1	11/2015	Kim et al.	
2016/0054443	A1	2/2016	Mallaghan	
2016/0069214	A1	3/2016	Engebretsen et al.	
2016/0156406	A1	6/2016	Frolov et al.	
2016/0171896	A1	6/2016	Buchmueller et al.	
2016/0247405	A1	8/2016	Paczan et al.	
2016/0247407	A1	8/2016	Paczan et al.	
2016/0247512	A1	8/2016	Duong et al.	
2016/0275801	A1 *	9/2016	Kopardekar	G08G 5/0043
2016/0310051	A1	10/2016	Brister et al.	
2016/0378108	A1	12/2016	Paczan et al.	

FOREIGN PATENT DOCUMENTS

JP	2007279308	10/2007
JP	2009530159	8/2009
JP	2010095246	4/2010
JP	2010132096	6/2010
JP	2013239134	11/2013
JP	2014078232	5/2014
JP	2015191254	11/2015

OTHER PUBLICATIONS

Office action for U.S. Appl. No. 14/569,233, dated Nov. 23, 2016, Paczan et al., "Commercial and General Aircraft Avoidance using Multi-spectral wave Detection", 11 pages.

Office action for U.S. Appl. No. 14/569,183, dated Nov. 9, 2016, Paczan et al., "Commercial and General Aircraft Avoidance using Acoustic Pattern Recognition", 21 pages.

Office action for U.S. Appl. No. 14/569,125, dated Sep. 8, 2016, Buchmueller et al., "Commercial and General Aircraft Avoidance using Light Pattern Detection", 16 pages.

The PCT Search Report and Written Opinion dated Mar. 9, 2016 for PCT application No. PCT/US2015/065352, 11 pages.

Office action for U.S. Appl. No. 14/569,233, dated Jul. 21, 2017, Paczan et al., "Commercial and General Aircraft Avoidance using Multi-spectral wave etection", 9 pages.

The Canadian Office Action dated Mar. 14, 2018 for Canadian patent application No. 2968864, a counterpart foreign application of U.S. Pat. No. 9,761,147, 4 pages.

The Japanese Office Action dated May 22, 2018 for Japanese Patent Application No. 2017-531325, a counterpart foreign application of U.S. Pat. No. 9,761,147, 9 pages.

Office Action for U.S. Appl. No. 15/473,468, dated Mar. 2, 2018, Buchmueller, "Multi-Zone Montoring Systems and Methods for Detection and Avoidance of Objects by an Unmaned Aerial Vehicle (UAV)", 14 pages.

* cited by examiner

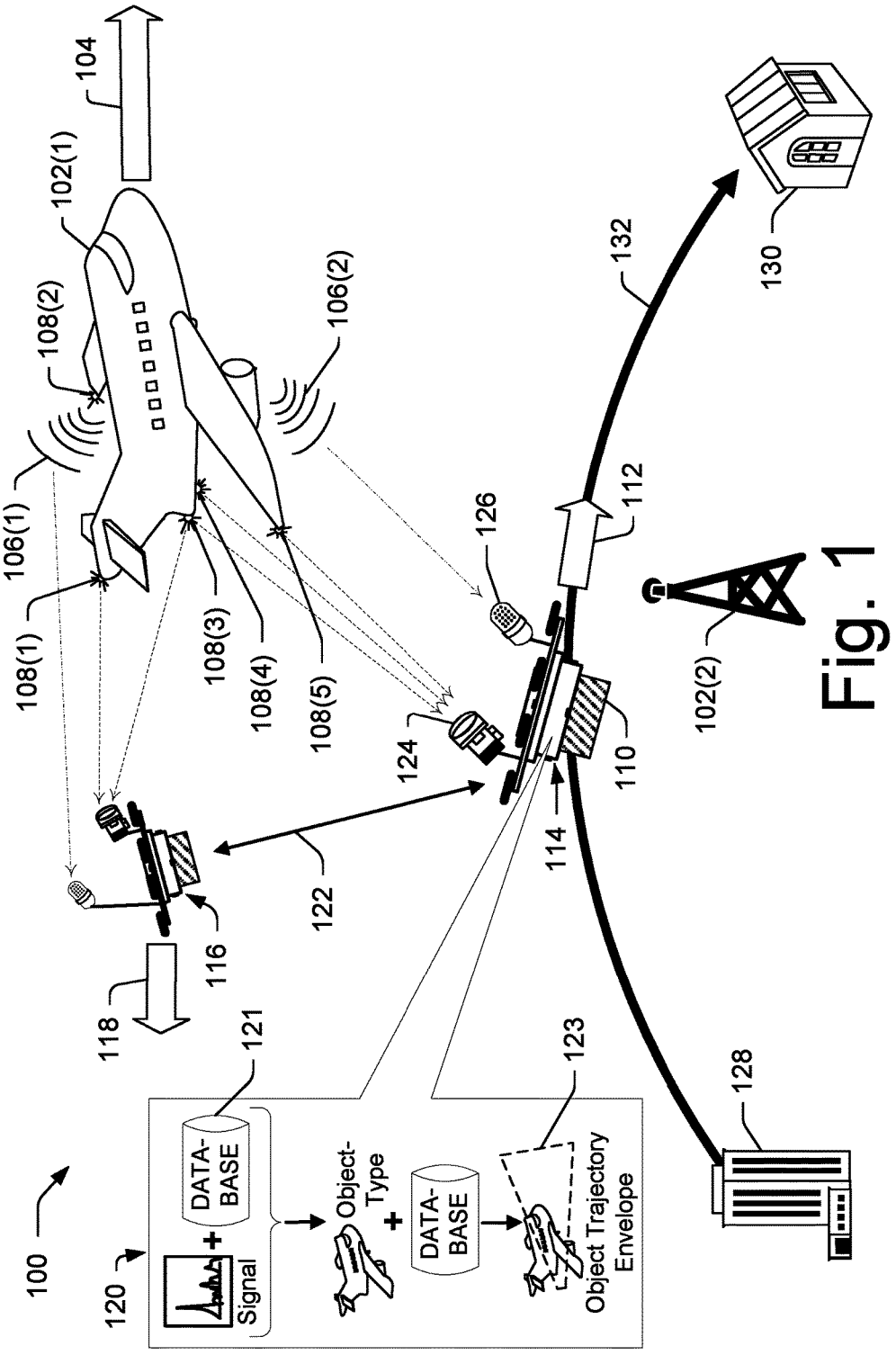
100
120
Signal
DATA-BASE
121
Object-Type
DATA-BASE
123
Object Trajectory Envelope
128
130
132
102(1)
102(2)
104
106(1)
106(2)
108(1)
108(2)
108(3)
108(4)
108(5)
110
112
114
116
118
122
124
126

Fig. 1

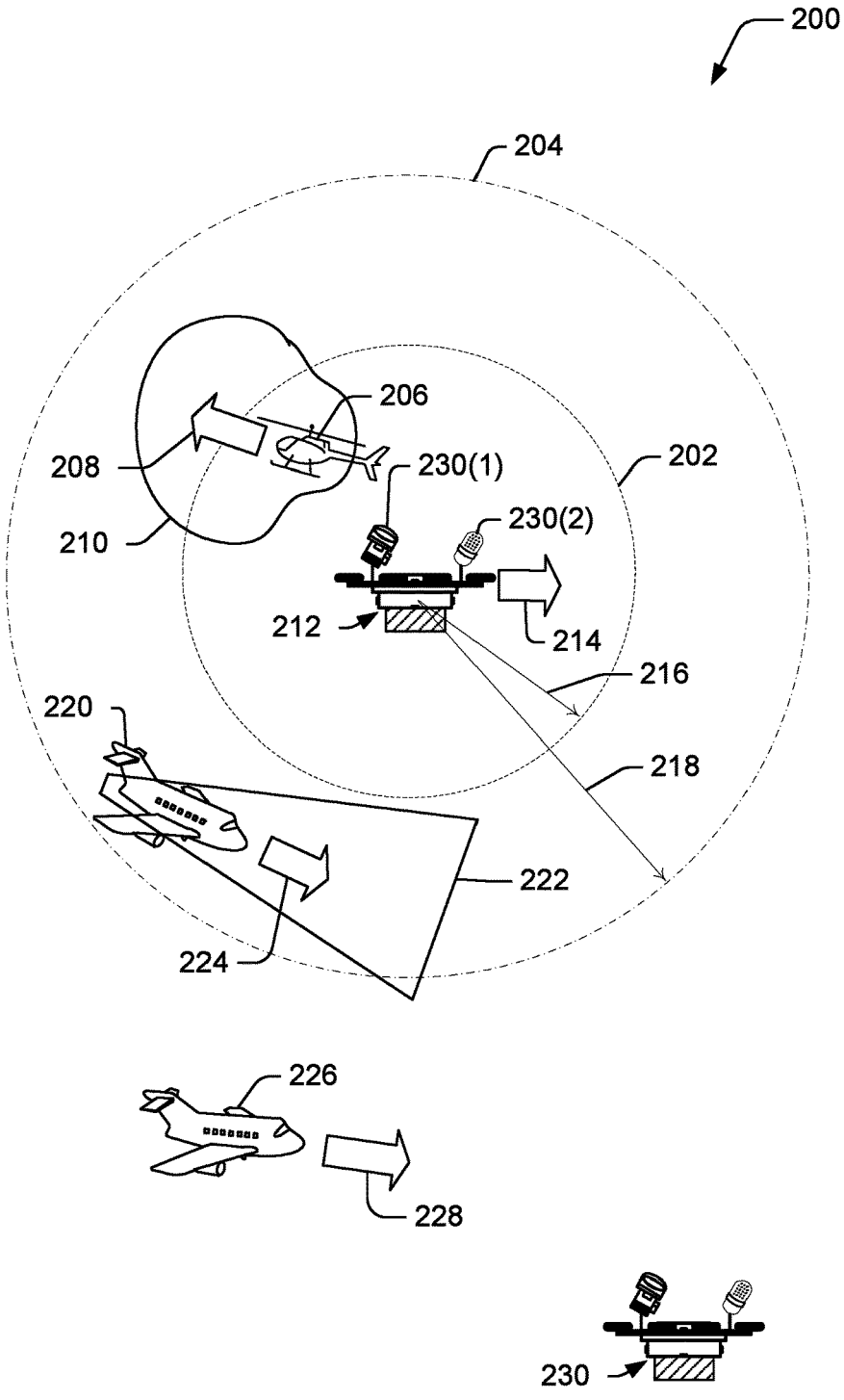
200
204
206
208
230(1)
202
230(2)
210
212
214
216
220
218
222
224
226
228
230

Fig. 2

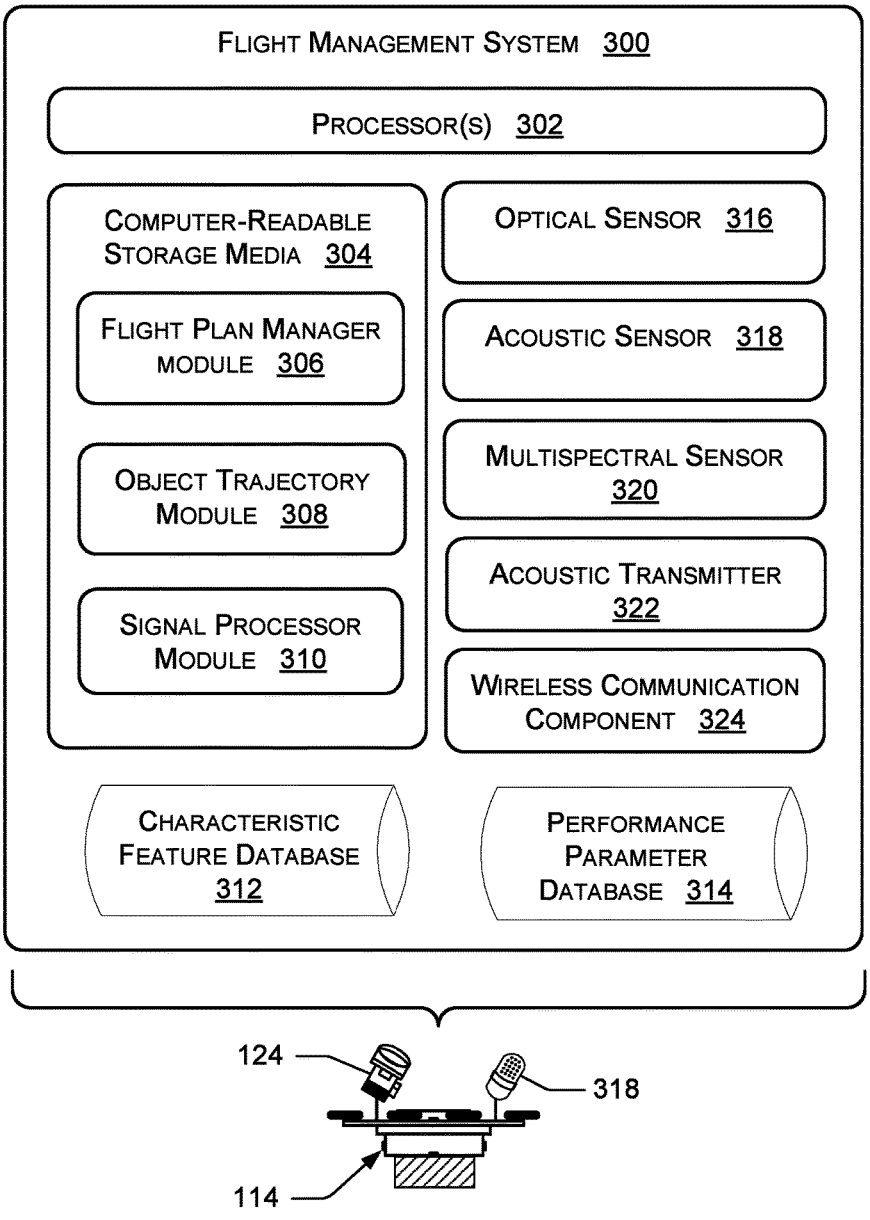
FLIGHT MANAGEMENT SYSTEM 300
PROCESSOR(S) 302
COMPUTER-READABLE STORAGE MEDIA 304
FLIGHT PLAN MANAGER MODULE 306
OBJECT TRAJECTORY MODULE 308
SIGNAL PROCESSOR MODULE 310
OPTICAL SENSOR 316
ACOUSTIC SENSOR 318
MULTISPECTRAL SENSOR 320
ACOUSTIC TRANSMITTER 322
WIRELESS COMMUNICATION COMPONENT 324
CHARACTERISTIC FEATURE DATABASE 312
PERFORMANCE PARAMETER DATABASE 314
124
318
114

Fig. 3

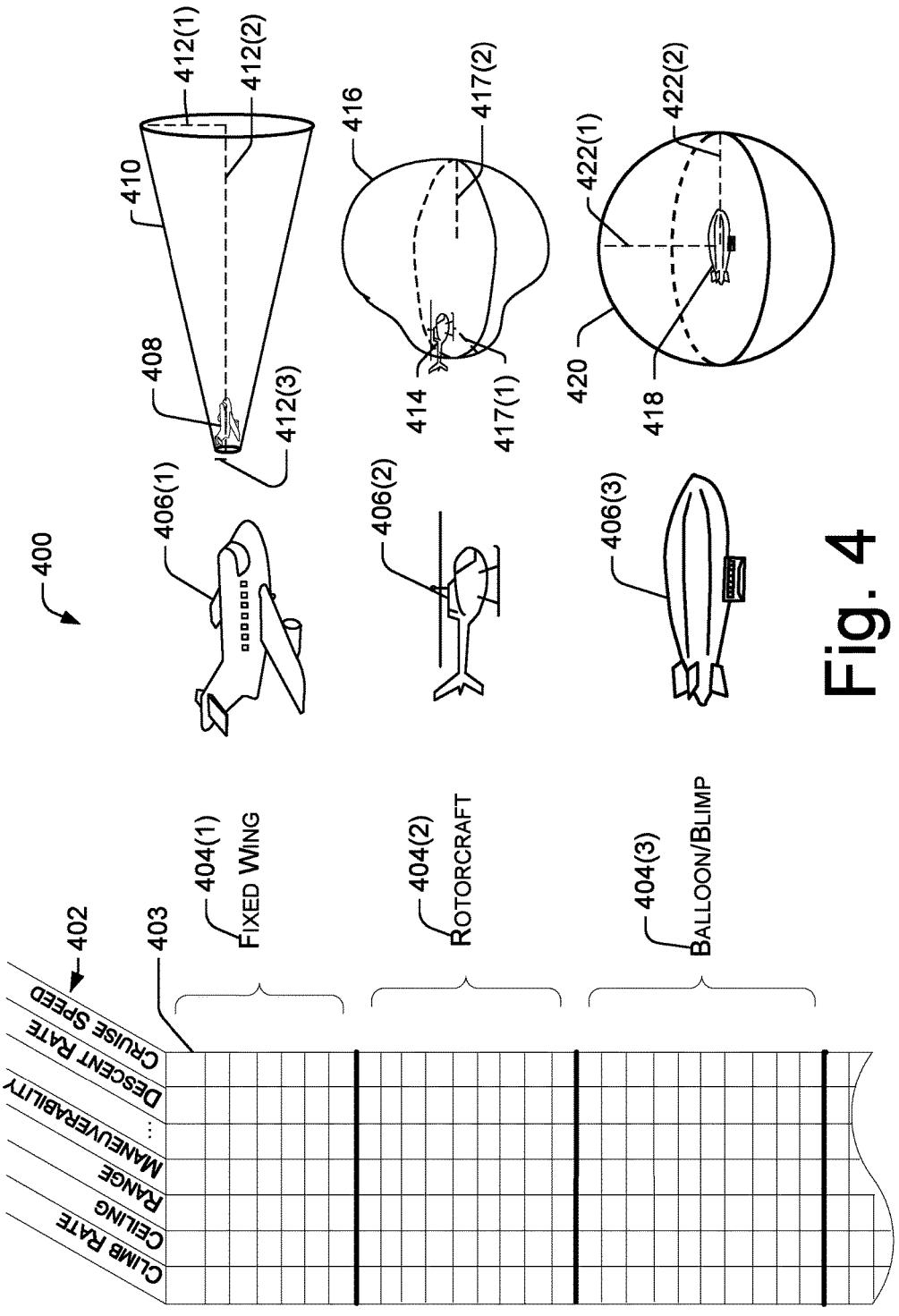
400
402
403
404(1)
FIXED WING
404(2)
ROTORCRAFT
404(3)
BALLOON/BLIMP
CLIMB RATE
CEILING
RANGE
MANEUVERABILITY
DESCENT RATE
CRUISE SPEED
406(1)
406(2)
406(3)
408
410
412(1)
412(2)
412(3)
414
416
417(1)
417(2)
418
420
422(1)
422(2)

Fig. 4

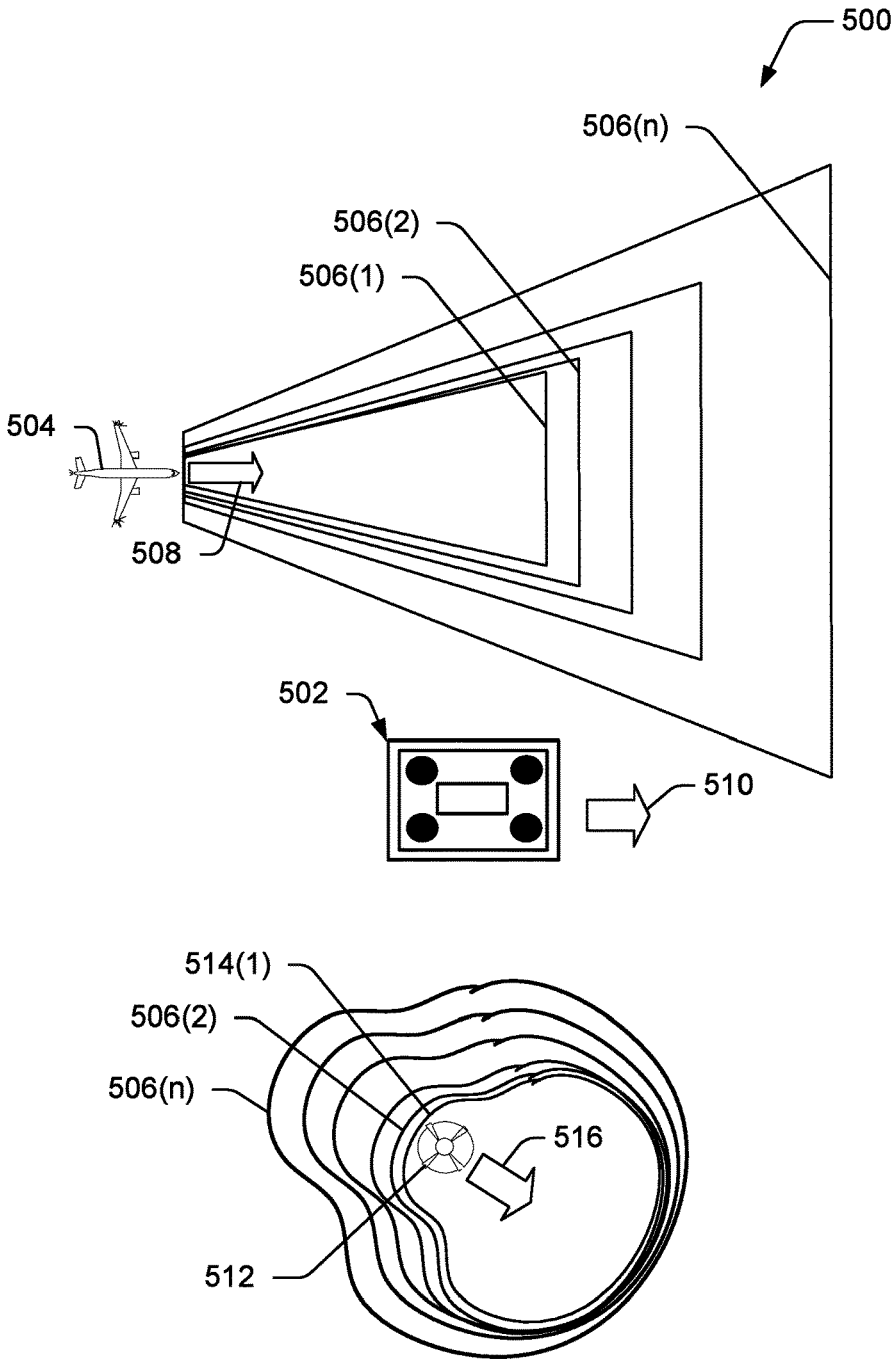

Fig. 5

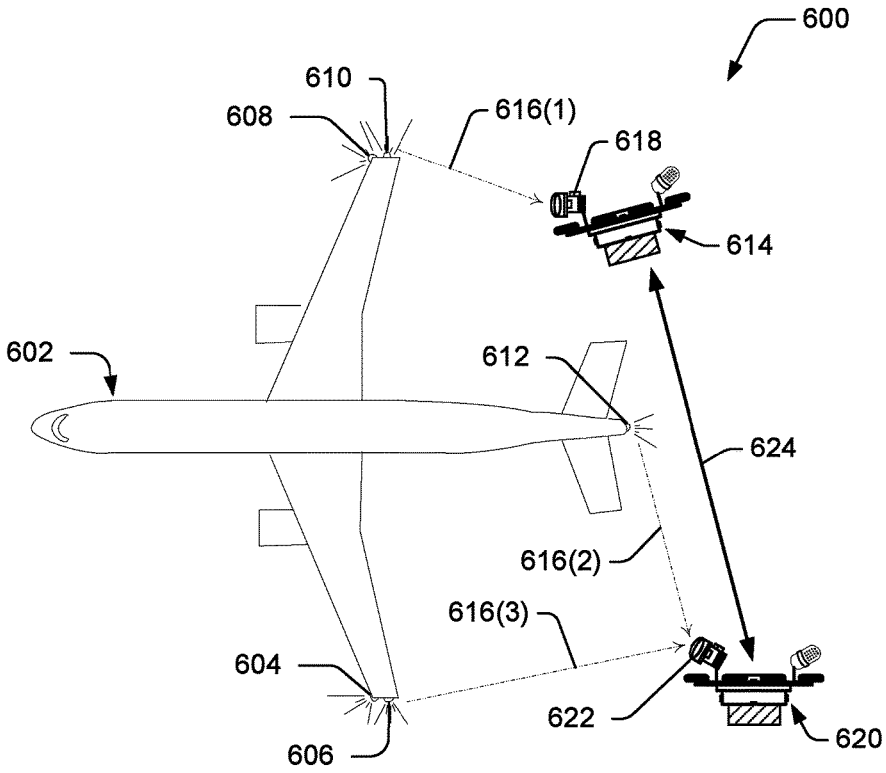
600
610
608
616(1)
618
614
602
612
624
616(2)
616(3)
604
622
620
606

Fig. 6A

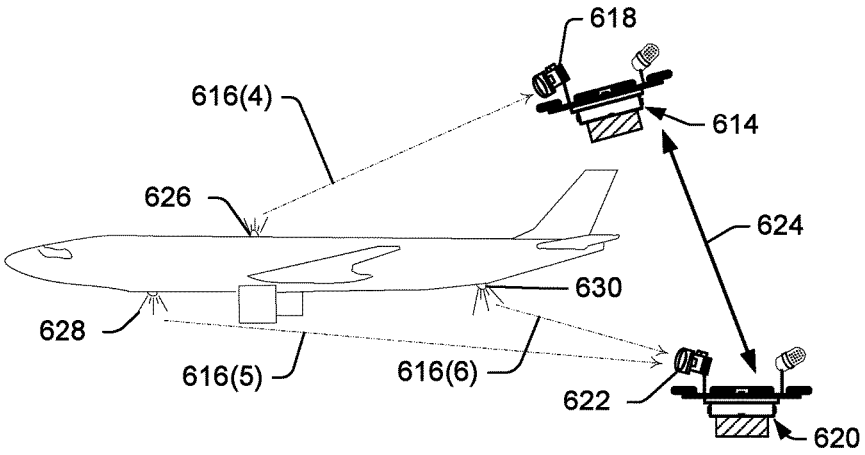
618
616(4)
614
626
624
630
628
616(5)
616(6)
622
620

Fig. 6B

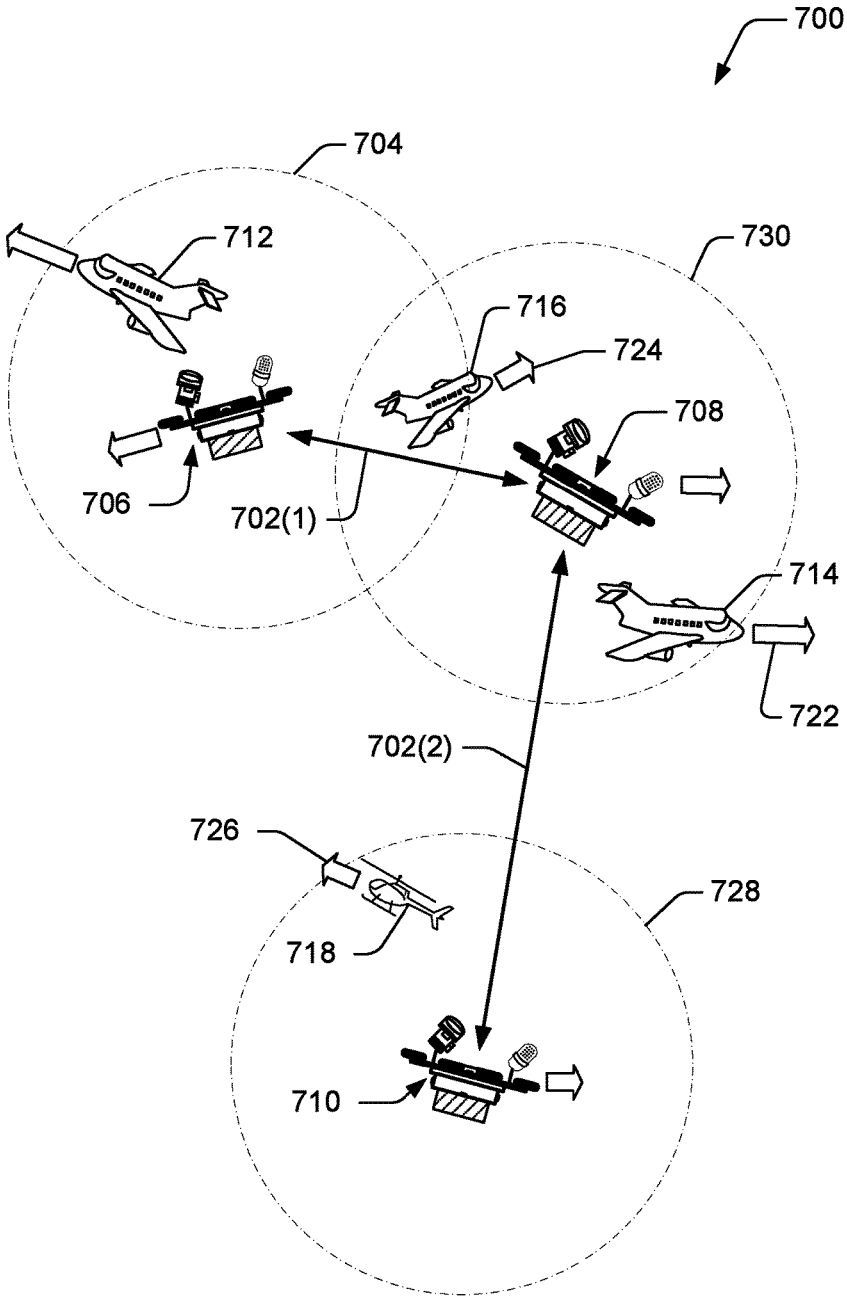
700
704
712
730
716
724
708
706
702(1)
714
722
702(2)
726
728
718
710

Fig. 7

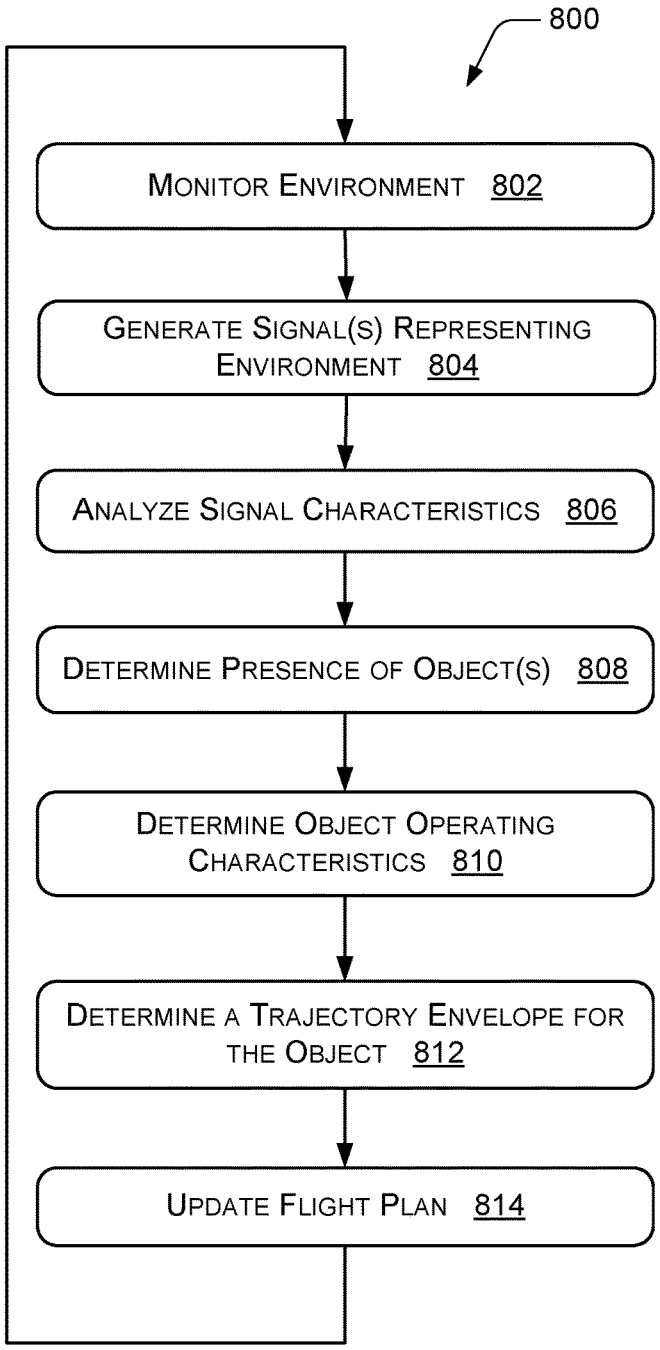
800
MONITOR ENVIRONMENT 802
GENERATE SIGNAL(S) REPRESENTING ENVIRONMENT 804
ANALYZE SIGNAL CHARACTERISTICS 806
DETERMINE PRESENCE OF OBJECT(S) 808
DETERMINE OBJECT OPERATING CHARACTERISTICS 810
DETERMINE A TRAJECTORY ENVELOPE FOR THE OBJECT 812
UPDATE FLIGHT PLAN 814

Fig. 8

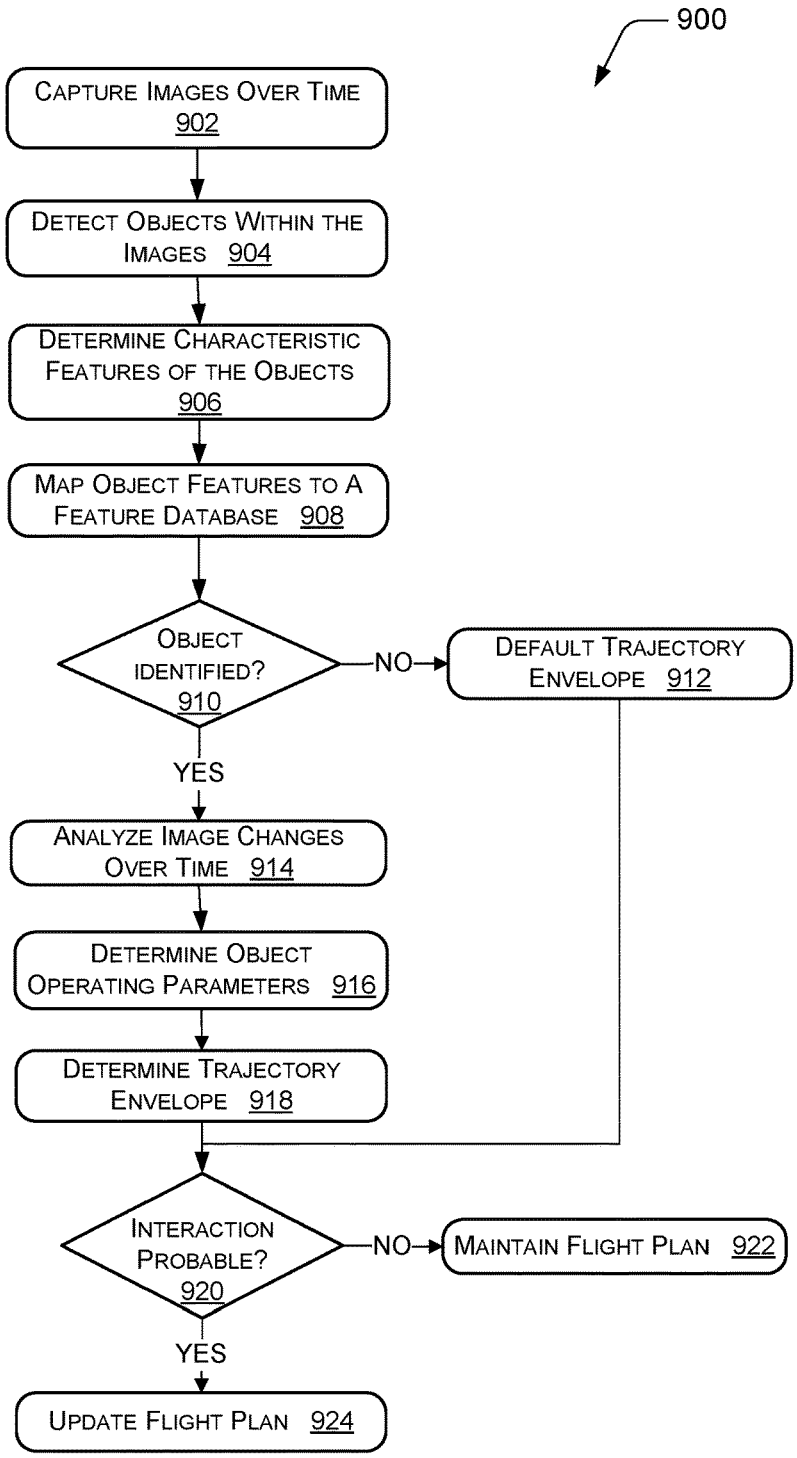
900
CAPTURE IMAGES OVER TIME 902
DETECT OBJECTS WITHIN THE IMAGES 904
DETERMINE CHARACTERISTIC FEATURES OF THE OBJECTS 906
MAP OBJECT FEATURES TO A FEATURE DATABASE 908
OBJECT IDENTIFIED? 910
NO
DEFAULT TRAJECTORY ENVELOPE 912
YES
ANALYZE IMAGE CHANGES OVER TIME 914
DETERMINE OBJECT OPERATING PARAMETERS 916
DETERMINE TRAJECTORY ENVELOPE 918
INTERACTION PROBABLE? 920
NO
MAINTAIN FLIGHT PLAN 922
YES
UPDATE FLIGHT PLAN 924

Fig. 9

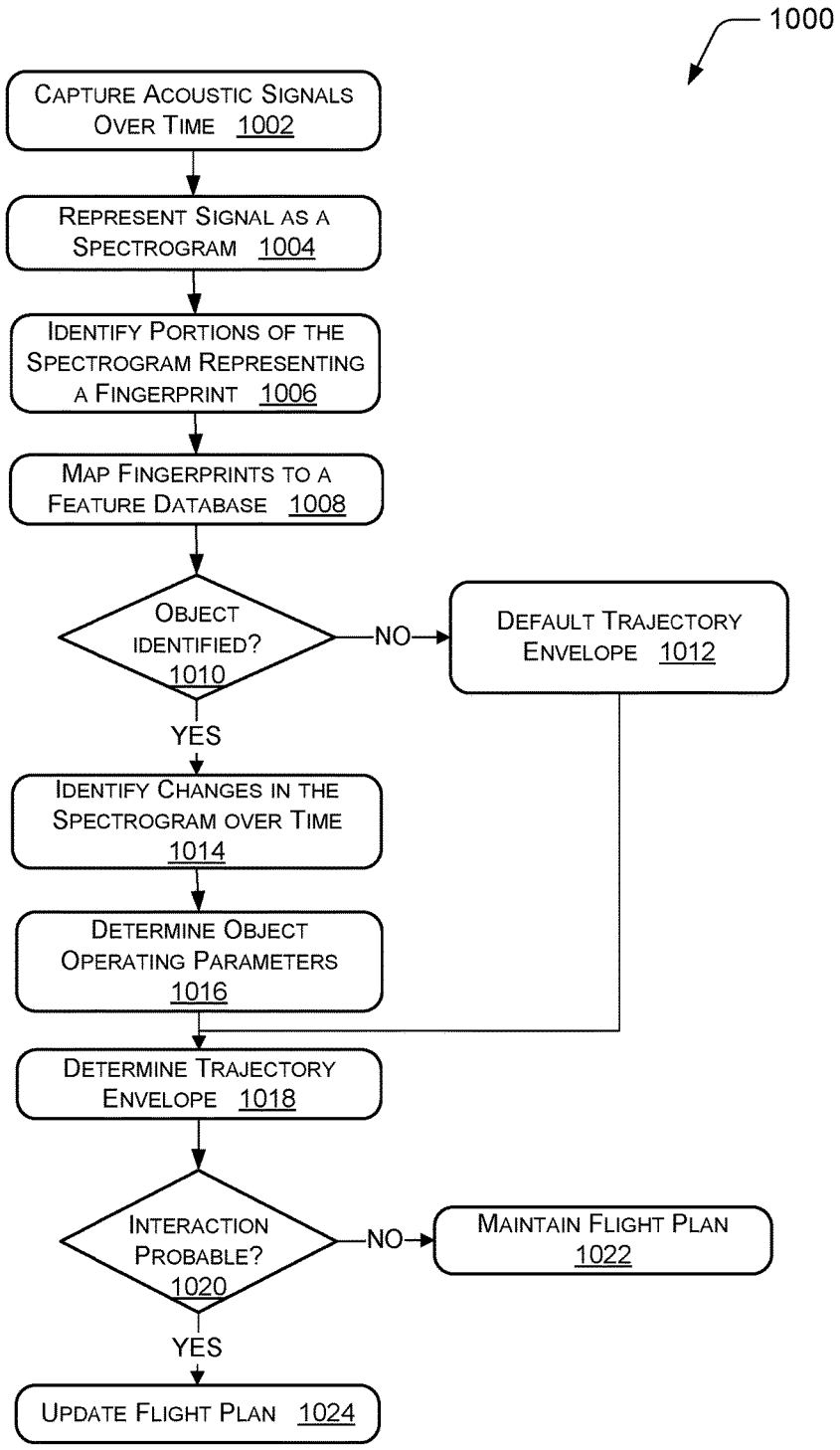
1000
CAPTURE ACOUSTIC SIGNALS OVER TIME 1002
REPRESENT SIGNAL AS A SPECTROGRAM 1004
IDENTIFY PORTIONS OF THE SPECTROGRAM REPRESENTING A FINGERPRINT 1006
MAP FINGERPRINTS TO A FEATURE DATABASE 1008
OBJECT IDENTIFIED? 1010
NO
DEFAULT TRAJECTORY ENVELOPE 1012
YES
IDENTIFY CHANGES IN THE SPECTROGRAM OVER TIME 1014
DETERMINE OBJECT OPERATING PARAMETERS 1016
DETERMINE TRAJECTORY ENVELOPE 1018
INTERACTION PROBABLE? 1020
NO
MAINTAIN FLIGHT PLAN 1022
YES
UPDATE FLIGHT PLAN 1024

Fig. 10

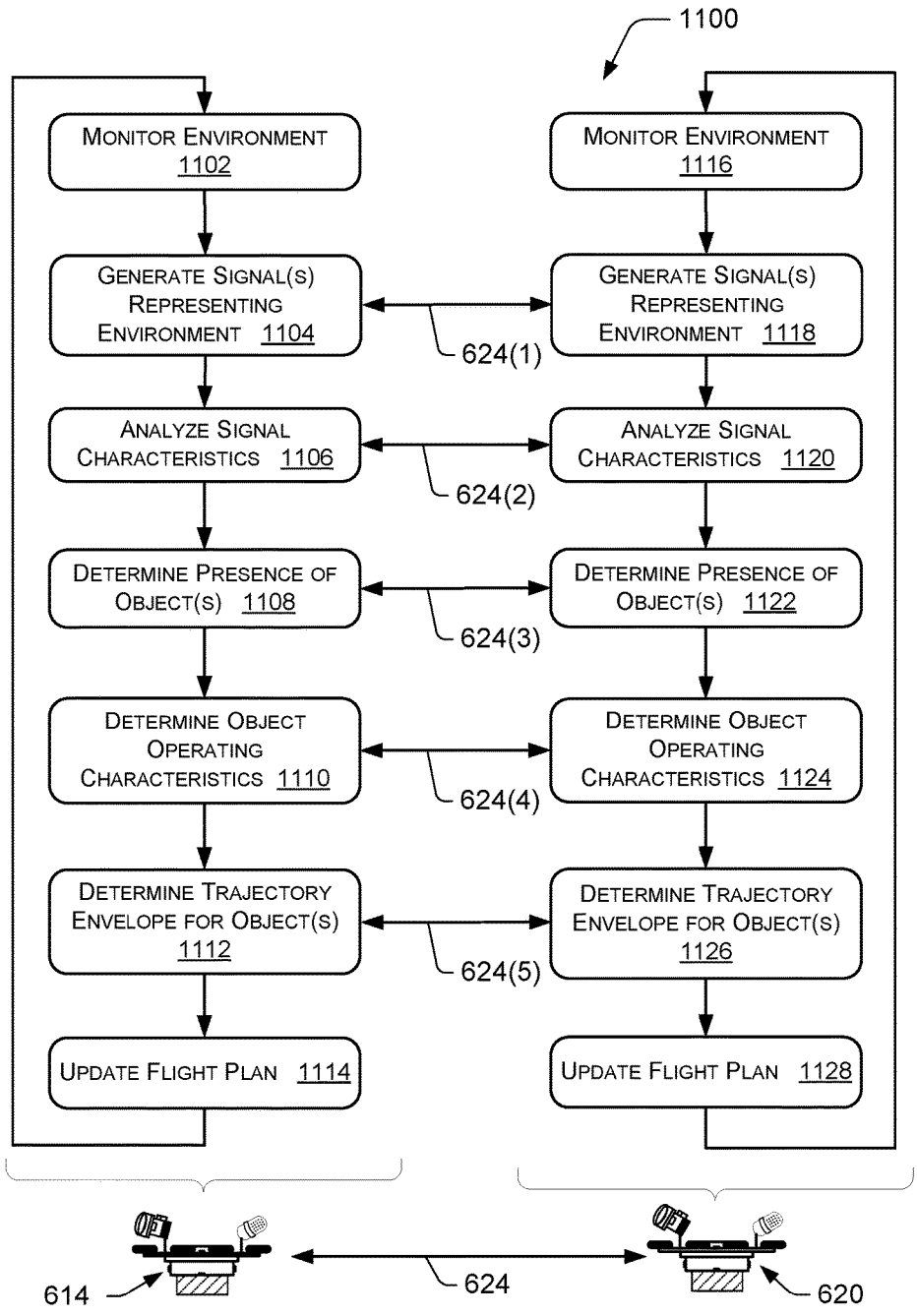
1100
MONITOR ENVIRONMENT 1102
GENERATE SIGNAL(S) REPRESENTING ENVIRONMENT 1104
ANALYZE SIGNAL CHARACTERISTICS 1106
DETERMINE PRESENCE OF OBJECT(S) 1108
DETERMINE OBJECT OPERATING CHARACTERISTICS 1110
DETERMINE TRAJECTORY ENVELOPE FOR OBJECT(S) 1112
UPDATE FLIGHT PLAN 1114
MONITOR ENVIRONMENT 1116
GENERATE SIGNAL(S) REPRESENTING ENVIRONMENT 1118
ANALYZE SIGNAL CHARACTERISTICS 1120
DETERMINE PRESENCE OF OBJECT(S) 1122
DETERMINE OBJECT OPERATING CHARACTERISTICS 1124
DETERMINE TRAJECTORY ENVELOPE FOR OBJECT(S) 1126
UPDATE FLIGHT PLAN 1128
624(1)
624(2)
624(3)
624(4)
624(5)
614
624
620

Fig. 11

SYSTEMS AND METHODS FOR UNMANNED AERIAL VEHICLE OBJECT AVOIDANCE

CROSS-REFERENCE TO RELATED APPLICATIONS

This application is a continuation of co-pending U.S. patent application Ser. No. 14/569,125, entitled "Commercial and General Aircraft Avoidance using Light Pattern Detection," filed Dec. 12, 2014, the contents of which are incorporated herein in their entirety.

BACKGROUND

Unmanned Aerial Vehicles (UAV) have become relatively common among hobbyists, commercial entities (e.g., aerial photography), and military users. These aerial vehicles generally operate at low altitudes where air traffic is busiest and most unpredictable. For example, take-off and landing of commercial aircraft, test flights, private pilot activity, hobbyists, balloons and blimps, aerial advertising, float planes, emergency responders and other UAVs may be more likely to be present within the UAV's airspace. A UAV, operating autonomously or under the control of an operator must actively avoid interference with other objects, both moving and stationary, that are present within the UAV's airspace.

Aircraft collision avoidance systems (ACAS) and aircraft separation assurance systems (ASAS) are intended to operate independently of a ground-based air traffic controllers. Several systems are commonly used onboard manned aircraft to avoid collisions and maintain aircraft separation, for example, airborne radar and traffic collision avoidance systems. However, these systems are often heavy, expensive, and/or rely on active interrogation of the transponder of aircraft in the vicinity of the aircraft conducting the interrogation. Lighter systems are generally passive and rely on transmission of transponder information from nearby aircraft, thereby only passively preventing an interaction between aircraft in the vicinity of the transmitting air vehicle. In some instances, an object may not be equipped with a transponder and therefore would be invisible to passive detection using these techniques. Additionally, in the busiest and most unpredictable airspace, i.e., low altitudes, manned air vehicles typically rely on the pilot and Air Traffic Controllers to prevent interactions and maintain adequate separation between aircraft.

BRIEF DESCRIPTION OF THE DRAWINGS

The detailed description is described with reference to the accompanying figures. In the figures, the left-most digit(s) of a reference number identifies the figure in which the reference number first appears. The same reference numbers in different figures indicate similar or identical items.

FIG. **1** is a schematic diagram of an illustrative unmanned aerial vehicle (UAV) airspace comprising partly of a UAV, moving and stationary objects, UAV sensors, and a UAV flight-management system to dynamically update a UAV flight plan.

FIG. **2** is a schematic diagram of a UAV's airspace illustrative of one or more UAV detection zones, including a perimeter object detection zone and an inner active object monitoring zone.

FIG. **3** is a block diagram illustrative of a UAV's flight management system comprising a processor, computer-readable media, one or more sensors, an acoustic transmitter, and wireless communication component.

FIG. **4** is a schematic diagram of an illustrative performance parameter database to associate an identified object with characteristic performance parameters and a scalable trajectory envelope with the identified object.

FIG. **5** is a schematic diagram of a UAV airspace indicating probability derived maps representing an object's current position, trajectory, and likelihood of trajectory change at a future time.

FIG. **6**A is a pictorial plan view representing a UAV airspace, including an aircraft with a representative lighting system including navigational and anti-collision lights. The representation further depicts multiple UAVs detecting the aircraft while maintaining network communication between the UAVs.

FIG. **6**B is a pictorial side view of the aircraft of FIG. **6**A. FIG. **6**B represents multiple UAVs detecting the same aircraft as in FIG. **6**A while maintaining network communication between the UAVs.

FIG. **7** is a schematic diagram representing a plan view of a UAV's airspace and illustrating a UAV peer-to-peer (P2P) communication network capable of extending the detection limits of individual UAVs and increasing the signal strength of individual UAVs within the network.

FIG. **8** is a flow diagram of an illustrative process for detecting and identifying an object and managing a UAV flight plan.

FIG. **9** is a flow diagram of an illustrative process for detecting and identifying an object and managing a UAV flight plan using images representing the UAV's airspace.

FIG. **10** is a flow diagram of an illustrative process for detecting and identifying an object and managing a UAV flight plan using acoustic signals representing the UAV's airspace.

FIG. **11** is a flow diagram of an illustrative process for detecting and identifying an object and managing a UAV flight plan showing the exchange of information over a multi-UAV communication network.

DETAILED DESCRIPTION

Overview

This disclosure is directed to an unmanned aerial vehicle ("UAV") and systems, devices, and techniques pertaining to object detection and/or object separation and avoidance during operation of the UAV. The UAV may be used to deliver cargo, e.g., from a fulfillment center to one or more destinations, and may then return to the fulfillment center or other location to retrieve other cargo for another transport to one or more additional destination. The UAV may include a plurality of sensors including, for example, one or more cameras capable of capturing one or more wavelengths of electromagnetic energy including infrared and/or visual, an acoustic sensor (e.g., a microphone, etc.), and/or multispectral sensor for the detection and autonomous avoidance of objects during the UAV's operation. The UAV may also include one or more transmitters, such as an acoustic transmitter.

The UAV may interrogate data captured by the sensors to determine a source, source trajectory, and source operating characteristics (e.g., a speed and/or acceleration). The UAV may also identify an object-type associated with the source of the transmission (e.g., stationary object, fixed wing air vehicle, rotorcraft, blimp/balloon, etc.) and likelihood of trajectory changes of the source by analyzing captured signal data over a period of time. From the object identifi-

cation and likelihood of trajectory change, the UAV may then determine a trajectory envelope for individual ones of the one or more objects detected by the UAV. The UAV may also compare its own flight plan to the one or more trajectory envelopes and update its own flight plans to minimize or eliminate the likelihood of interaction with the one or more objects. The object avoidance system may be used to continuously ensure safe travel for the UAV and objects within UAV's airspace throughout the UAV's operation.

In various embodiments, an object detection and avoidance system may include one or more monitoring zones. In one implementation, a UAV may actively monitor one or more air-space regions, including an interior active monitoring zone nearest to the UAV. The UAV may also monitor a detection zone beyond the active monitoring zone and to the maximum detection limits of the UAV's sensors. Beyond a detection zone, the UAV may not monitor objects or object locations. However, the UAV may exchange information about objects with one or more nearby UAVs to effectively increase the UAV's detection limit and/or detection zone perimeter.

When an object is present in the outermost monitored airspace region, the detection zone, the UAV may constantly monitor low-fidelity operating characteristics of the object such as relative position and/or trajectory. When an object moves into the innermost airspace region, the active monitoring zone, the UAV may constantly monitor characteristics of the object with a higher degree of fidelity. For example, the UAV may maintain at least an active position of the object, a trajectory of the object, and/or a trajectory envelope for the detected object.

In accordance with one or more embodiments, the UAV may be equipped with a flight management system comprising a processor, computer readable media, one or more sensors, one or more output devices, and a wireless communications component. The flight management systems may receive and analyze sensor data representing signals from the UAV's airspace. The flight management system may compare the analyzed data to database information to identify the source of the signals. The flight management system may determine operating characteristics of the identified object based in part on changes in the received signals. Further, the flight management system may determine a trajectory envelope for one or more detected objects based at least partly on the performance parameters associated with the object by an object performance parameter database. The flight management system may also maintain a dynamic UAV flight plan and update the plan to reduce or eliminate the likelihood of interference with one or more objects operating within the UAV's airspace.

In some embodiments, an object performance parameter database may maintain information characterizing performance parameters associated with one or more objects within the UAV's airspace. For example, the object parameter databases may include characteristics of common or likely to be encountered objects (e.g., aircraft, stationary objects, etc.) within any given airspace. Sample characteristics may include, without limitation, rate of climb and/or rate of decent, an object's operating ceiling, range, speed, maneuverability, and/or a scalable trajectory envelope. Furthermore, the characteristics of the objects in the performance parameter database may organized into one or more classes of aircraft such as fixed wing, rotorcraft, blimp and/or balloon, experimental aircraft, etc.

Additionally, the object performance parameter database may include a scalable trajectory envelope for each object. A scalable trajectory envelope may be a three-dimensional geometry that describes that probability of trajectory change of the object based on the performance parameters associated with the object and stored in the performance parameter database. Further, the object's current operating characteristics such as the position relative to the UAV and/or the object's determined trajectory, including speed, may be used by the flight management system to scale the scalable trajectory envelope associated with the object and determine a trajectory envelope that represents the object's probability of trajectory change. Additionally, the flight management system may update its own flight plan to minimize interference with the object based on the scaled trajectory envelope.

In additional embodiments, a UAV's flight management system may determine a trajectory envelope for one or more objects detected in a UAV's airspace. A trajectory envelope may be determined based at least partly on the object's operating characteristics and/or a probability of trajectory change of the object. Furthermore, the flight management system may determine a probability of interaction between the UAV and the object based at least partly on the current trajectory of the detected object, the object's performance parameters, and one or more performance parameters associated with the object. The probability of interaction may vary at greater distances from the object and/or over time depending on the object's current operating characteristics and/or performance parameters associated with the object.

In some embodiments, the UAV may capture a plurality of images representing the UAV's airspace and analyze the captured images for indications of objects. An indication may be the profile of an aircraft and/or one or more navigation or anti-collision lights on the aircraft. Additionally, an indication may include the on-off frequency or rotational frequency of one or more identified aircraft lights. The UAV may analyze collected images for indications of similar lighting schemes or similar light flashing frequency and/or duration and, with reference to an object database, identify the object. Furthermore, object performance parameters may be determined from changes in the position of an identified object within the plurality of images relative to the UAV.

In further embodiments, the UAV may capture acoustic signals representing the UAV's airspace and analyze the captured acoustic signals over a period of time to identify the object or objects emitting or reflecting the acoustic signals and/or the change in the object's trajectory (e.g., direction and/or speed). The captured acoustic signal may represented as a spectrogram and identify portions of the spectrogram representing a fingerprint. The fingerprint may then be used to identify the object. Furthermore, the object's operating parameters (e.g., trajectory and/or speed, etc.) based on changes in the acoustic signal over a period of time. Additionally a trajectory envelope may be determined to describe the likelihood of the object interacting with the UAVs' current flight plan. If an interaction is probably or even possible, the UAV's flight plan may be updated.

In still some embodiments a UAV may communicate with one or more nearby UAVs via a peer-to-peer (P2P) network to share sensor-captured information. A nearby UAV may have additional information about an object in shared airspace. One or all UAVs in the network may supplement captured data with shared data to improve the accuracy of object detection and classification.

In still further embodiments, one or more UAVs may maintain a communication network to extend the detection limit of any individual UAVs within the network. A sensor may have an inherent instrument detection limit creating a maximum object detection distance from the UAV. How-

ever, a first UAV may maintain a communication link with a first plurality of nearby UAVs. Furthermore, an individual UAV of the first plurality may be either within or outside of the first UAV's detection limits. In turn, each member of the first plurality of UAVs may maintain a communication link with one or more additional UAVs from within a second plurality of UAVs. The first UAV may capture information related to a detected object within its own detection limits and share the captured information with one or more UAVs of the first plurality, including the second UAV. The one or more UAVs of the first plurality may then, in turn, share the captured information with the second plurality and/or utilize the information for object detection. Thereby, the captured information shared over the communication network may be used to improve the accuracy of object detection and classification and extend the determination limits of individual UAVs within the network.

The techniques, apparatuses, and systems described herein may be implemented in a number of ways. Example implementations are provided below with reference to the following figures.

FIG. **1** is a schematic diagram of an illustrative UAV's airspace **100** partly including a UAV **114**; moving and stationary objects **102**; UAV sensors, including for example an optical sensor **124** and/or an acoustic sensor **126**; and an UAV flight-management system **120** to dynamically update a UAV flight plan **132**. The airspace **100** may be, for example, the airspace between the UAV's base location **128** and one or more destination locations **130**. The UAV's airspace **100** may also include airspace associated with UAV loading (i.e., where the UAV loads a payload **110** for delivery), tack-off, and/or delivery). The relative position of the one or more objects **102** and one or more nearby UAVs **116** is not limiting, and thus they may be at any location relative to the UAV **114** within the UAV's airspace **100**.

The UAV's airspace **100** may include a plurality of objects **102**. The objects may include a myriad of object types. For example, as shown in FIG. **1**, an object **102**(**1**) may be a fixed wing aircraft. However, an object **102** may also include any type of air vehicle, such as a nearby UAV **116**, a rotorcraft, and/or blimp or balloon. Additionally, an object **102** may be a stationary object such as a building or factory, antenna **102**(**2**), high voltage power lines, control tower, runway or runway lighting, bridge, wildlife (e.g., birds, etc.), tree, or other natural formation such as a mountain or rock formation, for example.

An object **102** may be associated with one or more operating characteristics **104** such as, for example: trajectory, speed, and/or acceleration. Further, an object **102** may generate one or more capturable indications. Object generated indications may refer to energy waves created, reflected, and/or emitted by an object, including acoustic or electromagnetic energy (i.e., visible light **108** and infrared frequencies) and/or acoustic signals **106**, for example. An object **102** may also reflect and/or emit unique frequencies throughout the electromagnetic spectrum depending on the materials or systems that make up an object **102**. For example, hyperspectral imaging or multispectral imaging may be used to determine the composition of an object **102** by capturing specific frequencies of reflected electromagnetic energy. In one embodiment, the polymer of the paint or similar coating may produce a unique spectral fingerprint from which an object **102** may be identified.

Furthermore, a UAV may house a flight management system **120** to direct the signal capture and analysis; object detection, and modifications to the UAV's flight plan. An embodiment of a flight management system **120** is described in further detail below with respect to FIG. **3**. For example, the flight management system **120** may access object indications (e.g., signals generated from sound **106** caused by the object, signals generated from light **108** emitted from the object) and process the indications into a format suitable for analysis. For example, acoustic signals **106** may be formatted into a spectrogram representing the frequency change of the signal over time. The flight management system **120** may then identify features of the signal representative of the object and compare those features to a database of features associated with known objects. The flight management system may thereby positively identify the object associated with the indications. The flight management system may then associate performance parameters from a database **121** with the identified object to determine an operating envelope **123** or probability of trajectory change.

Additionally, the flight-management system **120** may determine the distance between the UAV **114** and one or more identified objects **102**. The distance may be determined by range-finding techniques such as, without limitation, a range-finding focusing mechanism, a laser rangefinder, a pulse radar technique, or an ultrasonic ranging technique. The flight-management system **120** may first identify an object operating in the UAV's airspace and then determine the distance and operating characteristics of the object using range-finding techniques.

Additionally, the UAV's flight management system **120** may compare the UAV's operating characteristics **112** and current flight plan **132** to the identified object's operating envelope to determine the necessity of modification to the current flight plan **132**. The flight management system **120** may update the flight plan by determining a minimum likelihood of interaction with the identified object's operating envelope as well as a maximum efficiency (fuel consumption and/or flight time) for delivery of the payload **110**.

The UAV **114** may maintain a communication network **122** such, as a peer-to-peer network (P2P network), or similar communication interface between the UAV **114** and one or more nearby UAVs **116**. The UAV **114** may utilize information gathered from nearby UAVs **116** to improve accuracy of object identification and extend the detection limits of the UAV's sensing equipment to include the detection limit of the one or more nearby UAVs **116** of the network. Additionally, data shared via the communication interface **122** may be used to triangulate the location of objects **102** over time and improve the accuracy of determined operating object characteristics **104** and/or the operating characteristics **118** of the one or more nearby UAVs **116** present within the UAVs airspace **100**.

Furthermore, a flight management system **120** may maintain a dynamic flight plan **132** for the UAV **114**. The dynamic flight plan **132** may describe the completed portion and/or planned portion of a flight path between the UAV's base location **128** and one or more destination locations **130**. The flight management system **120** may consider fuel level, weigh of payload **110**, distance to one or more of the destination locations **130**, distance traveled from a base location **128**, airspace congestion, etc. Furthermore, the flight management system **120** may include the location of one or more remote charging stations, suspension of operations due to airspace congestion and/or likelihood of interference with an object **102** in the UAV's airspace **100**, or other unplanned destination as part of optimization of the flight plan **132**.

FIG. **2** is a schematic diagram of a UAV's airspace illustrative of one or more UAV detection zones, including a perimeter object detection zone and an inner active object

monitoring zone **200**. In some embodiments, the UAV detection zones may include an active object monitoring zone **202** and an object detection zone **204**. A UAV **212** may maintain two zones at perimeter distances **216** and **218**, respectively. However, more or fewer zones may be used. The active monitoring zone **202** is maintained at a distance that it ensures safe operation of the UAV **212** relative to the UAV's operating characteristics **214** and the operating characteristics of one or more objects within the UAV's airspace **100**. The perimeter distance **216** of the active monitor zone **202** may therefore vary depending on various factors. Furthermore, an object detection zone distance **218** may be maintained at the detection limits of the UAV's sensors **230**. Objects operating in either the active object monitoring zone **202** or the object detection zone **204** may be detected and monitored using visual and/or acoustic signatures of the objects. For example in an acoustic detection, the UAV may receive object generated or reflected acoustic indications (i.e., sound waves from operation of an object). Additionally or alternatively, the UAV may capture visual images of the UAV's airspace, including lighting associated with one or more objects, to identify and monitor objects.

The UAV's airspace **100** may contain one or more unmonitored objects **226**, one or more detected objects **220**, and/or one or more actively monitored objects **206**. Alternatively, any one zone or all zones within the UAV's airspace **100** may contain no objects. Furthermore, unmonitored objects **226** may be outside of the detection limits of the UAV's sensors **230**. The UAV **212** may obtain unmonitored object operating characteristic **228** from one or more nearby UAV's **230** such that the one or more nearby UAV's **230** shares, via a communication interface, unmonitored object operating characteristics **228** when the object enters the UAV's detection zone **204**.

The UAV **212** may monitor one or more operating characteristics **222** of objects within the object detection zone **204** such as location, speed, and/or trajectory of the object **220**. In some instances, the UAV **212** may not monitor operating characteristics **228** of objects outside of the detection zone due to limitations of sensors, likelihood of interaction, and/or other reasons. Further, the UAV **212** may associate a trajectory envelope **224** with the object **220** and the UAV's flight management system may update the UAV's flight plan to avoid interaction with the trajectory envelope **224** in the future.

For objects operating in the UAV's detection zone **204** the detectable signal received from an object may be proportional to the distances between the object **220** and the UAV **212** at any point in time. Therefore, the UAV **212** may associate a trajectory envelope **224** with the object **220** that is scaled proportionally to the signal strength relative to a historical signal strength and/or a maximum scaling factor when the signal strength falls below a threshold level. Additionally, the trajectory envelope **224** may reflect a level of risk the UAV operator wishes to assume for the likelihood of interaction with other objects within the UAV's airspace **100**. The resulting trajectory envelope would be a maximum relative to the determined object operating characteristics. In some cases, the UAV **212** may suspend operation to accommodate busy airspace where the UAV **212** may not determine a sufficiently risk-free flight plan.

The UAV **212** may transition to an active monitoring of an object when the object (e.g., the object **206**) enters the active monitoring zone **202** and is located within the distance **216** from the UAV **212**. The object **206** may also be first detected within the active monitoring zone **202**. The UAV **212** may determine the object's operating characteristics **208** as well as identify the object type based on analysis of signals generated by the sensors **230** that observe the object. The UAV **212** may therefore maintain higher fidelity details of an object **206** within the active monitoring zone **202** relative to an object **220** within the detection zone **204**. For example, the UAV **212** may identify the object **206** by determining the object-type based at least in part on generated signals associated with the object **206**. The UAV **212** may then determine a probability of trajectory change associated with the object based at least in part on performance parameters associated with the identified object-type, such as maximum rate of climb and rate of descent (i.e., sink rate), the identified object's operating ceiling, rang, maximum speed and overall maneuverability or operating envelope. The identified object-type may be either stationary or moving, the object's operating characteristics, and determined probability of trajectory change may reflect the identified object-type. The UAV's flight management system may incorporate the higher fidelity details of the object's operating characteristics **208** to determine the object's trajectory envelope **210** and update the UAV's flight plan based at least in part on the determined trajectory envelope **210**.

FIG. **3** is a block diagram illustrative of a UAV's flight management system **300** comprising: a processor, computer-readable media, one or more sensors, an acoustic transmitter, and wireless communication component. FIG. **3** is discussed with reference to FIG. **1**. A UAV **114** may house a flight management system **300**. The flight management system **300** may be comprised of a processor **302**, a computer-readable storage media **304**, and one or more sensors including, for example, an optical sensor **316**, acoustic sensor **318**, and/or multispectral sensor **320**. The flight management system **300** may further comprise an acoustic transmitter **322** and wireless communication component **324**. Additionally, the flight management system may comprise one or more databases including, for example, a characteristic feature database **312** and a performance parameter database **314**.

The computer-readable storage media **304** may include a flight plan manager module **306**, an object trajectory module **308**, and a signal processor module **310**. Additionally, or alternatively the signal processor module **310** may be implemented, at least in part, on a remote server for analysis (e.g., uploaded and analyzed to a cloud server or dedicated server). The signal processor module **310** may obtain and process the signals captured by the one or more sensors. The signal processor module **310** may compare features in the signals to a database of known features thereby associating an object associated with the signals to a known object type (e.g., a fixed wing aircraft, or more particularly, a specific model of aircraft). The object trajectory module **308** may compare processed signals over a period of time to determine the trajectory of the object relative to the UAV **114**. Furthermore, the object trajectory module **308** may receive the identified object-type from the signal processor module **310** and compare the object-type to a database of performance parameters **314** associated with a plurality of object-types. The object trajectory module **308** may receive identification of the object from the signal processor module **308**, and with the object performance parameters and current operating characteristics, determine a trajectory envelope for the object.

The flight plan manager module **306** may store the UAV's current flight plan and interact with the object trajectory module **308** to update the UAV's flight plan as necessary. For example, the flight plan manager module **306** may determine a likelihood of interaction between the UAV's

current flight plan **132** and the object's trajectory envelope. The flight plan manager module **306** may determine an optimized flight plan to avoid interaction with an object's trajectory envelope as well as factors such as: fuel level, payload weight, distance to one or more destination, distance traveled from a base location, airspace congestion, etc.

The optical sensor **316** may capture one or more images of the UAV's airspace (e.g., the airspace **100** shown in FIG. **1**) with an imaging sensor or other type of optical sensor over time for analysis by the signal processor module **310**. For example, the optical sensor **316** may capture multiple images of the UAV's airspace containing one or more objects (e.g., the objects **102** shown in FIG. **1**). The signal processor module **310** may detect one or more characteristic features of the objects within the images for comparison with a characteristic feature database **312**. An object is identified as a specific object-type when there is a positive match between the characteristic features of the object and one or more features in the characteristic feature database **312**. For example, image analysis may detect the presence of a plurality of navigational or anti-collision lights in an arrangement (e.g., distances/spacing and/or locations) associated with a fixed wing object. The signal processor module **310** may determine characteristic features of the plurality of lights, such as spacing and/or blinking frequency or rotation frequency of the light pattern, possibly using the distance information of the UAV from the object, as discussed above. The object may be identified by a comparison between the characteristic features identified from the image and a characteristic feature database **312**.

More particularly, image analysis may be used to identify common lighting patterns present on an aircraft. For example, a commercial aircraft operating in regulated airspace typically require one or more navigational lights and anti-collision lighting. Typically, navigational lighting consists of at least red and white lights on the port, or left side of the aircraft, and green and white lights on the starboard, or right side, of the aircraft. Additionally, the aircraft may have a white light at the end of the wings and on the fuselage of the aircraft and anti-collision lighting at a forward position on the fuselage of the aircraft. The signal processor module **310** may compare the identified characteristic features, such as the relative position of one or more detected lighting arrangements on the aircraft, with similar features stored in the characteristic feature database module **312** to determine the aircraft's identity. Additionally, the signal processor module **314** may determine the flashing frequency of the identified lighting arrangement with reference to a characteristic feature database module **308** to identify the aircraft **102**.

Furthermore, the one or more objects may be identified by comparing visual characteristics of the one or more objects with characteristics stored in the characteristic feature database module **312**. For example, if the object is a fixed wing aircraft, the signal processor module **310** may use image analysis techniques such as edge detection and feature extraction to determine that the object has an unswept-wing with a wingspan of thirty-six feet, a conventional wheeled undercarriage, an aspect ratio of 7.32, a length of twenty-seven feet, and/or a propeller. By comparing the identified characteristic features to the characteristic feature database **312**, the signal processor module **310** may demine the object to be a "Cessna **172**," a type of small private aircraft, or another craft within a similar class.

An acoustic sensor **318** may generate an acoustic signal based on sound generated or reflected by an object. The acoustic sensor **318** may be in the form of an array assembly of acoustic sensors. Through signal processing, directionality and/or movement of object associated with the generated acoustic signal may be determined, such as through use of beamforming techniques. Thus, processing of the generated signal may enable tracking location, orientation, and/or movement of the object, as well as determining a unique signature of the signal that indicates a classification of a type of object that is associated with the sound. Furthermore, an acoustic transmitter **322** may transmit acoustic waves that may be reflected by one or more objects operating within the airspace.

A signal processor module **310** may represent the signal as a spectrogram of signal intensity, time, and frequency. The signal processor module **310** may identify portions of the spectrogram that represent unique fingerprints of the captured acoustic signal at **1006**. For example, the signal processor module **310** may identify fingerprint portions of the spectrogram based the signal intensity relative to a signal-to-noise ratio of the spectrogram meeting or exceeding a threshold value. By comparing the identified fingerprint to the characteristic feature database **312**, the signal processor module **310** may demine the object to be a small private (e.g., a Cessna **172**) aircraft, or another aircraft within a similar class. As discussed above, the signal processor module **310** may employ beamforming processing to locate a direction of a sound and/or to track movement of a source of the sound.

Additionally, or alternatively, a multispectral sensor **320** may capture electromagnetic energy reflected or emitted for an object to identify specific characteristics of the object. For example, a polymer-based coating unique to a particular design or type of aircraft may reflect a specific wavelength of electromagnetic energy. The multispectral sensor **320** may identify a fingerprint from the captured electromagnetic energy reflected by the coating, via the signal processor module **310**, and comparison of the fingerprint to the characteristic future database **312** may result in identification of the object.

The flight management system **300** may further identify the object's performance parameters with reference to a performance parameter database module **314**. The flight management system **300** may cross-reference the determined object-type of the identified object with a performance parameter database module **314** to determine the identified object's performance parameters. For example, the performance parameters may include, rate of climb and/or decent, the aircraft's operating ceiling, range, speed, maneuverability, and/or flight envelope of the identified object. For example, with reference to the identified small private aircraft above, the performance parameter database **314** may determine that the object has a cruise speed of 122 knots, a maximum speed of 163 knots, a service ceiling of 13,500 feet, and a rate of climb of 721 feet per minute. The flight management system **300** may use the performance parameters and operating characteristics of the object to determine a trajectory envelope and update the UAV's flight plan.

The object trajectory module **308** may receive and analyze one or more images of the UAV's airspace, in conjunction with object identification results and determined object performance parameters from the signal processor module **310** to determine the current trajectory of an identified object **102**, as well as the probability of a trajectory change, or trajectory envelope. For example, the identified small private aircraft may have a conical trajectory envelope and be scaled to reflect the small private aircraft's operating char-

acteristics. Trajectory envelopes are discussed in further detail with respect to FIGS. **4** and **5**.

The flight management system **300** may also comprise a wireless communication component **324** capable of maintaining a communication network (such as the communication network **122** shown in FIG. **1**), or a P2P network, between a plurality of UAVs. For example, a UAV and one or more nearby UAVs operating within the UAV's airspace may transfer database information, object identification data, and/or data representing a captured signal from the UAV's airspace. Furthermore, an object located within the detection limits of multiple UAVs may allow for the triangulation of the objects position relative to the UAV network.

FIG. **4** is a schematic diagram of an illustrative performance parameter database **400** to associate an identified object with characteristic performance parameters and a scalable trajectory envelope with the identified object. The database **400** may comprise of a plurality of performance parameters **402**, such as climb rate, operating ceiling, range, maneuverability, decent rate, cruise speed, etc., and associated values **403**. Every object maintained in the database **400** may have an associated value with each of the performance parameters **402**. The objects may be further categorized based on the object-type **404**, such as fixed wing **404**(**1**), rotorcraft **404**(**2**), balloon/blimp **404**(**3**), stationary object, etc. In some embodiments, the database **400** may include specific aircraft and/or objects, such as specific models of aircraft. Each object-type **404** may have one or more subcategories further identifying the object with increasing specificity. For example, "fixed wing" may be further subdivided into "commercial" and private pilot" and further again into "commercial-cargo" and "commercial-passenger." Furthermore, each object-type **404** may be represented by one or more visual representations **406**. The one or more visual representations may be used for identification of the structural features of an identified object. Additionally, the database **400** may comprise a scalable trajectory envelope for each object type. The scalable trajectory envelope may reflect a probability of trajectory change of the object based on one or more performance parameters **402** such as maneuverability, speed, or operating ceiling, for example, and associated performance values **403** of the identified object.

A trajectory envelope profile may be characterized as scalable volume representing the trajectory envelope. The scalable volume may be scaled based on an identified object's operating characteristics, such as speed and/or acceleration, historic information available for the object's trajectory. For example, a scaling factor may be sized to reflect a predictability factor associated with the object within the UAV's airspace. Furthermore, if the trajectory of a detected object has changed in excess of a threshold amount and/or in excess of a threshold number of instances within the UAV's airspace over the course of a predetermined amount of time, the scaling factor will be larger than if the object's trajectory is constant over the same predetermined amount of time. The predictability factor may approach a value of "1" for an object that is likely to maintain a constant trajectory based on historical data.

A scalable volume may be characteristic of the object type. For example, a fixed wing **408** aircraft's performance parameters generally result in a relatively constant flight path outside of takeoff, landing, and altitude changes to avoid turbulence or other aircraft. Therefore, the resulting scalable volume **410** may result in a conical-like scalable volume **410** reflecting the relatively moderate maneuverability of the aircraft and relatively narrow speed and acceleration envelope of the aircraft. The scalable trajectory envelope may be described mathematically by dimensional characteristics **412**. The dimensional characteristics may be scaled to represent the operating characteristics of the object.

Similarly, a rotorcraft **414**, having higher maneuverability relative to a fixed wing aircraft **408** may have a teardrop-like scalable volume **416**. A teardrop-like volume may represent the capability of the rotorcraft to rapidly change direction, speed, and/or acceleration. The rotorcraft's scalable volume **416** may be mathematically represented by similar dimensional characteristics **417** that may be scaled to reflect the rotorcraft's operating characteristics.

A third example, a balloon or blimp **418**, may have a relatively small spherical scalable volume **420**, reflecting the object's narrow performance parameters such as speed and maneuverability. The volume **420** may be spherical reflecting the blimp's unpredictability relative to a fixed wing aircraft **408** or rotorcraft **414**, for example. The spherical shape may be represented by dimensional characteristics **422** and scaled to reflect the blimp's operating characteristics.

FIG. **5** is a schematic diagram of a UAV airspace indicating probability-derived maps **500** representing an object's current position, trajectory, and likelihood of trajectory change at a future time. For example, the UAV's flight management system **300** may identify an object as a fixed wing aircraft **504** and then determine a three-dimensional trajectory envelope represented by a conical-like shape and scaled to represent the object's current operating characteristics **508**. The trajectory envelope may be further represented as a three-dimensional isoprobability (i.e., constant probability) trajectory map. The density of isoprobability lines of the trajectory map represents the varying probability of finding the object **508** at any given point within the volume described by the trajectory envelope. For example, a point with dense isoprobability lines may indicate a high likelihood of trajectory change at that point relative to the current trajectory.

For example, the probability of finding a fixed wing aircraft's location at some point in the future may be described by 1 to n isoprobability lines **506**. The probability of trajectory change in close proximity to the object's current position **506**(**1**) may be relatively low. An inverse relationship may be stated as the likelihood that the object will be located at a point close to the object's current position is relatively high. However, at a point further from the current position **506**(*n*), the probability of a trajectory change is relatively high compared to the closer position **506**(**1**), and therefore the likelihood of finding the fixed wing aircraft **504** at the further point **506**(*n*) in the future is lower.

A rotorcraft object **512**, however, may be more maneuverable than a fixed wing aircraft **504**, and therefore more unpredictable. In the rotorcraft example, the isoprobability lines far forward of the rotorcraft **512** may be more compressed representing a high likelihood that the rotorcraft may change trajectory. Isoprobability lines aft and at 90 and 180 degrees from the current trajectory may be less dense reflecting the rotorcraft's **512** ability to change course rapidly, while factoring in the probability that the rotorcraft **512** will maintain its current operating characteristics **516** (i.e., the rotorcraft is more likely to change forward direction in the long-term rather than short term).

The UAV's flight plan management system **300** may compare the UAV's current operating characteristics **510** and flight plan **132** to the current operating characteristics of one or more objects in the UAV's airspace **100** as well as probability maps associated with each object to determine the lowest risk flight plan for the UAV **502**. In this way, the

UAV **502** may manage risk to varying degrees relative to the UAV's airspace **100**. For example, in more controlled environments, such as a payload pick-up location, the risk taking ability of the UAV **502** may be increased to reflect the additional control mechanisms in place within environment.

In some instances, the level of risk associated with the flight plan may include consideration of filed flight plans with the governing body, such as the Federal Aviation Administration. Filed flight plans may include aircraft identification, equipment type (i.e., object type), cruise speed, flying time, etc. The UAV's flight plan management system **300** may interrogate a database of filed flight plans for aircraft to factor into a risk assessment, a likelihood of interaction between the UAV's flight plan **132** and the filed flight plan of an object in the UAV's airspace **100**.

The UAV operator may wish to significantly reduce or eliminate any risk taking ability of the UAV **502** in regulated airspace during payload delivery to ensure safety. This may result in the UAV **502** suspending its flight plan to accommodate busy airspace where the UAV **502** may not determine a sufficiently risk-free flight plan.

FIG. **6** is a pictorial plan view representing a UAV airspace, including an aircraft with a representative lighting system including navigational and anti-collision lights **600**. These lighting systems of a detected aircraft **602** may include a red **604** and white **606** light on the left side of the aircraft. A green **608** and white **610** light on the right side of the aircraft and a white light **612** at an aft portion of the aircraft—typically on the aircraft's tail. Additionally, the aircraft may have white lights on the top of the aircraft's midsection **626**. Further, the aircraft may have a white light **630** on an aft portion of the aircraft's fuselage as well as an anti-collision light **628** typically located forward of the wings and propulsion system and on the aircraft's fuselage. The intent of the lighting system is generally to increase visibility of the aircraft from all directions during low visibility situations such as fog/clouds or at night.

As discussed above with respect to FIG. **3**, the optical sensor **316** of the flight management system **300** may capture the relative location, flashing frequency and/or rotating frequency of aircraft lighting system **600**. For example, the anti-collision lighting **618** may have a rotating frequency between 40 and 100 cycles per minute. By comparing the location and/or frequency to the characteristic feature database **308**, the flight management system **300** may identify the object-type and further determine object operating characteristics and a trajectory envelope for the object.

When multiple UAVs are operating in the same airspace, they may establish a peer-to-peer network **624** to share information about their detected environments. For example, a first UAV **614** may have visibility of the green **608** and white light **610** on the right side of the detected aircraft **602** as well as the top white light **626**. The first UAV **614** may capture a plurality of images **616** using an optical sensor **618**.

A second UAV **620** may have direct visibility to the aft white light **612**, left side red **604** and white **606** lights, as well as the aft white light **630** and anti-collision light **628**. The second UAV **620** may capture a plurality of images **616** using its optical sensor **622**. Furthermore, each UAV may share captured images and processed data with the other UAVs operating within the network **624**. Data sharing is further described with respect to the multi-UAV communication network illustrated in FIG. **7**.

FIG. **7** is a schematic diagram representing a plan view of a UAV's airspace and illustrating a UAV peer-to-peer (P2P) communication network **700** capable of extending the detection limits of individual UAVs and increasing the signal strength of individual UAVs within the network. Two or more UAVs may be in communication via a P2P network **702** for example wherein the two or more UAVs may exchange information related to detected objects within their respective detection limits. A UAV may thereby extend the reach of its detection limits to include the detection limits of one or more additional UAVs, via the P2P network **702**. Additionally, the network of UAVs may improve the accuracy of the any individual UAV within the network **702** and provide data to triangulate the position of objects relative to the UAVs of the network where the object is within the detection limits of multiple UAVs.

For example, the communication network **700** may include 1 to n UAVs and a plurality of objects operating within the airspace. A first UAV **706** of the network may have a detection limit **704** associated with the reach of its sensors. Further, the UAV **706** may have one or more objects within its detection limits **704**. For example, this may include multiple fixed wing aircraft, one operating within the detection limit of only the first UAV **706** and the second fixed wing aircraft **716** operating within the detection limits of both the first UAV **706** and a second UAV **708**. The second UAV **708** having a detection limit **730** associated with the detection capabilities of its sensors.

The first UAV **706** may detect and identify the two objects as well as determine the operating characteristics of each object as discussed above. Further, the first UAV **706** may determine a trajectory envelope for each object as discussed above with respect to FIGS. **4** and **5**. The second UAV **708** may also detect the second fixed wing aircraft **716** and determine its operating characteristics **724** as well as a trajectory envelope for the object. The P2P network **702** may transfer operating characteristic data determined by the first and second UAV between the two UAVs. With the additional data, each UAV may update its determined operating characteristics and trajectory envelope. Furthermore, each UAV may use data collected from the other, with the position of the two UAVs being known relative to the network, to triangulate the location of the aircraft **716** relative to the two UAVs.

In addition to the second aircraft **716**, the second UAV **708** may detect and identify a third fixed wing aircraft **714** and the operating characteristics of the aircraft **722**. Since the third aircraft **714** is outside of the detection limits **704** of the first UAV **706**, the second UAV **708** may pass information relating to the third aircraft **714**, such as operating characterizes **722** to the first UAV **706** via the P2P network **702**. This may give the first UAV **706** greater visibility of objects operating outside of its detection limits **704**.

Likewise, an n-th UAV **710** may have a detection limit **728** associated with its sensors outside of the detection limits of either the first or second UAV. The n-th UAV **710** may share operating characteristic **726** of an object **718** detected within its detection limits **728** with one or more UAVs within the P2P network **702** to improve visibility of the airspace beyond the detection limits of each UAV operating in the P2P network.

In some embodiments, the first UAV **706** may improve the accuracy of its detection scheme by sharing information over the P2P network **702**. For example, when an object **716** is located at the outer detection limits **704** of the first UAV **706** and the object **716** may only be detectable by low energy signals collected by the UAV's sensors the first UAV **706** may rely on higher energy signals captured by the second, closer UAV **708**. Data sharing may be triggered when the signal-to-noise (SN) ratio of signals captured by a

UAV approach one and when a nearby UAV captures a signal with a higher SN ratio and is operating within the same P2P network **702**.

FIG. **8** is a flow diagram of an illustrative process for detecting and identifying an object and managing a UAV flight plan **800**. The order in which the operations are described is not intended to be construed as a limitation, and any number of the described blocks can be combined in any order and/or in parallel to implement the processes. The process **800** is described with reference to FIGS. **1** and **3**.

At **802**, the UAV **114** captures, via its one or more sensors, signals representing the UAV's airspace **100**. The UAV **114** may capture one or more object detectable signals **106** generated from an object **102** operating in the UAV's airspace **100**. The sensors may include the optical sensor **316**, the acoustic sensor **318**, and/or the multispectral sensor **320**, for example. If the object is an aircraft, the acoustic sensor **318** may capture one or more acoustic signals generated by the aircraft's propulsion systems, for example. Additionally, the aircraft may emit a thermal signature from heat generated by the aircraft's propulsion systems and detectable by an optical sensor **316** capable of electromagnetic energy in the infrared spectrum. Furthermore, the optical sensor **316** may collect visible images representing the UAV's airspace **100**.

The multispectral sensor **320** may receive electromagnetic signals reflected from objects to create a multispectral image. The multispectral image may be used to determine specific structural features, such as coating types, material types, etc. that make up the object and which reflect a specific energy signature. Unique structural features associated with the object may be used to identify the object.

Furthermore, the multispectral sensor may receive a broad spectrum of electromagnetic energy, but only specific bands within that spectrum may be analyzed by the signal processor **310** at **804**. For example, an object likely to be operating in the UAV's airspace and included in the characteristic feature database **308** may have a known spectral signature stored in the characteristic feature database **308**. The spectral signature may include one or more specific bands of electromagnetic energy that are uniquely associated with the object. Therefore, the signal processor module **310** may receive the entire spectrum or only portions, or bands, of whole spectrum. The bands are associated with the known spectral signature of the object likely to be present in the UAV's airspace. Likewise, the signal processor module **310** may analyze the entire spectrum or only the bands associated with objects likely to be present in the airspace.

At **804**, a signal processor module **310** may receive signals generated from the sensors, the signals representing the captured sensor data in a format that may be analyzed in an operation **806**. Furthermore, the signal processor module **310** may process the received signals to identify and exploit characteristic features present in the signals. Additionally, the signal processor module **310** may receive signals generated from the sensors of another UAV operating in the UAV's airspace and transmitted to the UAV over a peer-to-peer network. For example, the signal processor module **310** may identify portions of the signal that meet or exceed a threshold value based on signal intensity relative to a signal-to-noise ratio of the full signal.

At **806**, the signal processor module **310** may analyze the generated signal for characteristic features. A characteristic feature may be a unique spectral fingerprint of infrared energy, or an acoustic pattern represented by one or more unique time-frequency characteristics of the spectrogram. The signal processor module **310** may also have the data representing the generated signal via a wireless communication component to a remote server for analysis (e.g., uploaded and analyzed to a cloud server or dedicated server).

The signal processor module **310** may then determine the presence of one or more objects in the airspace at an operation **808**. The signal processor module **310** may accomplish this by comparing the characteristic features of the generated signal to a characteristic feature database **312** and matching the identified features to database features **312** of known object generated signals. When characteristics features of the generated signal are similar to one or more characteristic features in the characteristic feature database **312** the signal processor module **310** may identify the object based in part on the likelihood of finding the object in the UAV's airspace. For example, a UAV operating in Seattle, Wash. may associate characteristic features of a fixed wing object to a floatplane due to the prevalence of floatplanes in the region. However, a UAV operating in Tempe, Ariz. may or may not associate features with floatplane characteristics characteristic feature database **312** due to the marginal likelihood of the UAV encountering a floatplane in the desert.

The characteristic feature database module **308** may compare key features of the received signal to the database and thereby identify the object. Depending on the strength and quality of the received signal, the characteristic feature database module **308** may return a specific object identification, for example, a floatplane identified as a de Havilland Canada DHC-3 Otter. Where low signal strength or low signal-to-noise conditions exist, the characteristic feature database module **308** may return only an object-type. For example, the signal database module may return an identification as a "fixed-wing" or more specifically a "floatplane" object type. Additionally, the characteristic feature database module **308** may return no-identity or null identify.

At **810**, the UAV **114** determines the object's operating characteristics **104** based on sensor data and identification of the source from the signal processor module **310**. For example, a UAV **114** may monitor one or more object detectable signals **106** and determine the object's operating characteristics **104** based on changes in the signal strength and/or directionality over time.

At **812**, the UAV **114** may determine a trajectory envelope for the object **102**. The object trajectory module **308** may look up one or more performance parameters associated with the identified object **102** from a performance parameter database **314**. Performance parameters may include maximum speed, operating ceiling, maneuverability, etc. The object trajectory module **308** may factor in the object's performance parameters to determine the likelihood that the object will change its trajectory relative to the UAV. This likelihood of trajectory change may then be used to determine the shape and size of the trajectory envelope for each object that is identified by the UAV. This is described in detail with respect to FIGS. **4** and **5**.

For example, if the object identified at the operation **806** is a DHC-3 Otter, the object trajectory module **308** may determine a moderate likelihood of trajectory change based on the relative maneuverability of that specific aircraft. The resulting trajectory envelope may be a conical shape, the dimensions of which may be proportional operating characteristics of the DHC-3 Otter.

At step **814**, the UAV may apply the trajectory envelope from the operation **810** to update the UAV's flight plan **132**. For example, if the UAV's current flight characteristics **112** are likely to intersect with a determined trajectory envelope,

the UAV **114** may update its flight plan **132** to minimize or eliminate the likelihood of interference with the object **102**. Furthermore, the UAV **114** may consider features of its own flight plan **132** in determining an updated flight plan that is optimized with respect to distance to a destination **130**, payload weight, remaining fuel, proximity of charging stations, and/or distance traveled from a base location **128**, among other factors. In some situation, a UAV **114** may be required to suspend operation due to a crowded airspace **100**. A UAV **114** may also determine a flight plan **132** to return to a base location **128** is required due to insufficient fuel, unavailable fueling station, and/or high likelihood of interference with an identified object **102**, for example.

The UAV **114** may constantly monitor collected signals as described in process **800** throughout the UAV's operation.

FIG. **9** is a flow diagram of an illustrative process for detecting and identifying an object and managing a UAV flight plan using images representing the UAV's airspace. The process **900** may be periodic or continuous depending on factors such as fuel level, congestion in the UAV's airspace **100**, or operator preferences for risk level, for example. The order in which the operations are described is not intended to be construed as a limitation, and any number of the described blocks can be combined in any order and/or in parallel to implement the processes. FIG. **9** is discussed with reference to FIGS. **1** and **3**.

At **902**, the UAV's optical sensor **124** collects one or more images representing the UAV's airspace **100** over a period of time. The time period may be determined relative to the quality of the data received (i.e., signal strength or signal to noise ratio) or if no object **102** is detected within the images. Therefore, the time period may be longer if low quality data is received by the optical sensor **124** and the time period may be shorter if the quality of data is relatively good.

At **904**, the UAV's signal processor module **310** may analyze the collected images to determine the presence of one or more objects. For example, the image may contain a plurality of lights representing the detected object's navigational lights or anti-collision lights.

At **906**, signal processor module **310** may compare the determined characteristic features to a characteristic feature database **312** of known object sources. The comparison may result in a positively identified object at step **910**. However, if no object is identified, a null value is returned to the object trajectory module **308** resulting in a default trajectory envelope at **912**. The default trajectory envelope may ensure a desired safety factor.

At **916**, the signal processor module **310** compares changes in the object within the captured images over a predetermined period of time to determine operating characteristics **104** of the object **102**. For example, changes in the images relative to the UAV **114** may indicate the trajectory of the object **102**, speed, and/or acceleration of the object relative to the UAV **114**.

If an object **102** is identified by comparison of features to a characteristic feature database **312**, the identified object **102** may be associated with object performance parameters from a performance parameter database **314** at step **918**. The association may be done by a lookup table that associates the identified object with one or more performance parameters such as maximum rate of climb and rate of descent, the identified object's operating ceiling, rang, maximum speed and/or overall maneuverability, for example. The performance parameter database **314** may also include one or more scalable volume as described above with respect to FIG. **4**.

At **920**, the flight plan manger module **306** may compare the determined trajectory envelopes of the object **102** to the UAV's dynamic flight plan **132** to determine a likelihood of interaction. The trajectory envelope may be a default envelope from **912**. The UAV **114** may update its dynamic flight plan **132** to minimize the likelihood of interaction and optimize the flight plan **132** between the UAV's base location **128** and one or more destination locations **130**.

FIG. **10** is a flow diagram of an illustrative process for detecting and identifying an object and managing a UAV flight plan using acoustic signals representing the UAV's airspace. At **1002**, an acoustic sensor **126** may receive object generated or reflected acoustic signals. The acoustic sensor **126** may be in the form of an array assembly of sensors capable of detecting the directionality of the captured acoustic signal. The order in which the operations are described is not intended to be construed as a limitation, and any number of the described blocks can be combined in any order and/or in parallel to implement the processes.

At **1004**, the signal processor module **310** may represent the signal as a spectrogram of signal intensity, time, and frequency. The signal processor module **310** may identify portions of the spectrogram that represent unique fingerprints, or signatures, of the captured acoustic signal at **1006**. For example, the signal processor module **310** may identify fingerprint portions of the spectrogram based the signal intensity relative to a signal-to-noise ratio of the spectrogram meeting or exceeding a threshold value.

Furthermore, the range of signal-to-noise ratio that is considered significant may vary depending on the quality of the signal (i.e., strength and overall signal-to-noise ratio). Additionally, if no significant features are identified, the signal processor module **310** may widen the range of signal-to-noise ratios considered significant. Further, the signal processor module may also widen the range of signal-to-noise ratios if no object is identified at step **1010**.

At **1008**, the signal processor module **310** may map the fingerprints to a feature database to identify the object **102** at **1010**. However, if no object is identified, a null value is returned to the object trajectory module **308** resulting in a default trajectory envelope at **1012**. The default trajectory envelope may ensure a desired safety factor.

At **1014**, the signal processor module **310** may identify changes in the spectrogram over a predetermined period of time in order to determine operating characteristics **104** of the identified object **102**. For example, changes in the intensity or directionality of the captured acoustic signal may indicate the trajectory, speed, and/or acceleration of the object **102** relative to the UAV **114**.

Identification of the object at **1010** may also be used by the object trajectory module **308** to associate performance parameters with the identified object **102** at **1016**. For example, the object trajectory module **308** may look up the identified object **102** in a performance parameter database **314** and associate performance parameters with the identified object **102**. The object trajectory module **308** may determine a trajectory envelop at **1018** based at least in part on the object's operating characteristics **104** and associated performance parameters.

At **1020**, the object trajectory module **308** may determine whether interaction between the UAV's flight plan **132** and the object's trajectory envelop is probable. The trajectory envelope may be a default envelope from **1012**. If an interaction is not probable, the UAV **114** may maintain its current flight plan **132** at **1022**. However, if interaction is determined to be probable, the UAV **114** may update its dynamic flight plan **132** at **1024** to minimize the likelihood

of interaction and optimize the flight plan **132** between the UAV's base location **128** and one or more destination locations **130**.

FIG. **11** is a flow diagram of an illustrative process for detecting and identifying an object and managing a UAV flight plan showing the exchange of information over a multi-UAV communication network **1100**. The order in which the operations are described is not intended to be construed as a limitation, and any number of the described blocks can be combined in any order and/or in parallel to implement the processes. FIG. **11** is described with reference to FIG. **6**.

For example, operations **1102-1114** and **1116-1128** each mirror the process steps described in FIG. **8**. Operations **1102-1114** are conducted by the flight management system aboard a first UAV **614** and steps **1116-1128** are conducted by the flight management system aboard a second UAV **620**. At operations **1104**, **1106**, **1108**, **1110**, and/or **1112** the first UAV **614** may provide information to the second UAV **620** and vice versa via a communication network **624**.

For example, the first UAV **614** may provide raw signal data or analyzed signal characteristics at step **1106** to the second UAV **620**. The second UAV **620** may receive or reject the data based on its own captured signal quality. For example, if the second UAV **620** determines the signal strength, or signal-to-noise ratio, of its own signal is too low, the second UAV **620** may accept the data from the first UAV **614** via the network interface **624**.

In some embodiments, the first UAV **614** may receive the analyzed signal characteristics from the second UAV **620** at **1120**. The second UAV **620** may not perform the operations **1122-1128** in this scenario, but may just pass information to the first UAV **614** for processing. The first UAV **614** may accept or reject the data received from the second UAV **620**. If the First UAV **614** accepts the information, the first UAV **614** will incorporate the analyzed signal characteristics from the second UAV **620** to determine a trajectory envelope for one or more objects identified at **1108**. Further, the first UAV **614** may share the determined trajectory envelope for the one or more objects from **1112** to the second UAV **620**. In this way, the second UAV **620** may act as a sensing UAV and relay analyzed sensor data to the first UAV **614**. This may avoid duplication of effort. However, the second UAV **620** may independently determine the trajectory data.

CONCLUSION

Although the subject matter has been described in language specific to structural features and/or methodological acts, it is to be understood that the subject matter defined in the appended claims is not necessarily limited to the specific features or acts described. Rather, the specific features and acts are disclosed as illustrative forms of implementing the claims.

What is claimed is:

1. A method of monitoring airspace at least partially surrounding an unmanned aerial vehicle (UAV), the method comprising:

receiving one or more signals representative of an environment extending from the UAV;

analyzing the one or more signals to determine a presence of an object;

identifying an object type of the object based at least in part on the one or more signals;

determining one or more operating characteristics of the object based at least in part on the one or more signals; and

determining a trajectory envelope of the object based at least in part on the object type and the one or more operating characteristics of the object, wherein the trajectory envelope includes at least a probability of possible future locations of the object during a predetermined period of time.

2. The method as recited in claim **1**, wherein the trajectory envelope is determined as a series of isoprobability lines indicative of a range of probabilities of a location of the object during the predetermined period of time.

3. The method as recited in claim **1**, further comprising determining one or more performance parameters of the object by querying a database based at least in part on the object type, the database correlating one or more object types with one or more performance parameters, and wherein the determining the trajectory envelope is based at least in part on the performance parameters of the object.

4. The method as recited in claim **3**, wherein the database includes one or more scalable trajectory envelopes associated with the object type.

5. The method as recited in claim **1**, wherein determining the trajectory envelope includes calculating a scaling factor based at least in part on the one or more operating characteristic of the object and applying the calculated scaling factor to a scalable trajectory envelope.

6. The method as recited in claim **1**, further comprising:

comparing the trajectory envelope of the object to a flight plan of the UAV; and

determining whether the flight plan of the UAV intersects with at least a portion of the trajectory envelope.

7. The method as recited in claim **6**, further comprising:

updating the flight plan of the UAV based at least in part on determining that the flight plan of the UAV intersects with the at least a portion of the trajectory envelope.

8. An unmanned aerial vehicle (UAV), comprising:

one or more processors;

memory to store computer-readable instructions;

one or more sensors generating signals representative of at least a portion of an airspace about the UAV; and

a flight management component stored within the memory that, when executed, causes the one or more processors to process at least some of the signals and to perform acts comprising:

detecting a presence of an object in the at least a portion of the airspace about the UAV based at least in part on the at least some of the signals;

determining, based at least in part on the at least some of the signals, at least an object type of the object and an operating characteristic of the object; and

determining a trajectory envelope of the object based at least in part on the object type of the object and the operating characteristic of the object, wherein the trajectory envelope includes at least a probability of possible future locations of the object.

9. The UAV as recited in claim **8**, wherein the flight management component further analyzes the trajectory envelope based at least in part on a flight plan of the UAV and updates the flight plan of the UAV in response to the analysis indicating an intersection of the flight plan of the UAV and the trajectory envelope.

10. The UAV as recited in claim **8**, wherein the trajectory envelope is determined as a series of isoprobability lines indicative of a range of probabilities of a location of the object at a future time.

11. The UAV as recited claim 8, further comprising a performance parameter database that includes one or more performance parameters associated with one or more object types.

12. The UAV as recited in claim 11, wherein the performance parameter database further includes one or more scalable trajectory envelopes associated with the one or more object types.

13. The UAV as recited in claim 11, wherein determining the trajectory envelope is further based at least in part on the one or more performance parameters associated with the object.

14. The UAV as recited in claim 8, wherein determining the trajectory envelope includes retrieving a scalable trajectory envelope and applying a scaling factor to the scalable trajectory envelope based at least in part on the operating characteristic of the object.

15. A system comprising:

one or more processors; and

memory to store computer readable instructions that when executed, causes the one or more processors to perform acts to:

analyze signals generated by one or more sensors onboard an unmanned aerial vehicle (UAV) to determine a presence of an object in an airspace around the UAV;

determine an object type of the object in response to determining the presence of the object in the airspace around the UAV; and

determine a trajectory envelope of the object based at least in part on the object type of the object, wherein the trajectory envelope includes at least a probability of potential changes of a location of the object over a period of time.

16. The system as recited in claim 15, wherein the determining the trajectory envelope includes querying a performance parameter database to obtain the trajectory envelope.

17. The system as recited in claim 16, wherein the performance parameter database includes one or more scalable volumes associated with one or more object types, the one or more scalable volumes used to create the trajectory envelope.

18. The system as recited in claim 15, wherein determining the trajectory envelope includes retrieving a scalable volume from a performance parameter database based at least in part on the object type; applying a scaling factor, based at least in part on the object type, to the scalable volume from the performance parameter database to create a scaled volume; and associating the scaled volume with a location of the object.

19. The system as recited in claim 15, wherein the acts further comprise updating a flight plan of the UAV based at least in part on the trajectory envelope of the object.

20. The system as recited in claim 15, wherein the acts further comprise determining one or more performance parameters for the object based at least in part on the object type of the object, the one or more performance parameters including speed capabilities of the object and maneuverability of the object, and wherein the trajectory envelope is determined based at least in part on the one or more performance parameters.

* * * * *