US009903947B2

(12) **United States Patent**
Das et al.

(10) **Patent No.: US 9,903,947 B2**
(45) **Date of Patent: Feb. 27, 2018**

(54) **BOUNDARY SIGNAL DETECTION**

(71) Applicants: **Deere and Company**, Moline, IL (US); **The Board of Trustees of the University of Illinois**, Urbana, IL (US)

(72) Inventors: **Colin E. Das**, Cedar Falls, IA (US); **Brent R. Trenhaile**, Bettendorf, IA (US)

(73) Assignee: **Deere & Company**, Moline, IL (US)

(*) Notice: Subject to any disclaimer, the term of this patent is extended or adjusted under 35 U.S.C. 154(b) by 0 days.

(21) Appl. No.: **14/822,821**

(22) Filed: **Aug. 10, 2015**

(65) **Prior Publication Data**

US 2017/0045612 A1 Feb. 16, 2017

(51) **Int. Cl.**

G01S 13/88	(2006.01)
A01D 34/00	(2006.01)
G05D 1/00	(2006.01)

(52) **U.S. Cl.**

CPC ***G01S 13/881*** (2013.01); ***A01D 34/008*** (2013.01); ***G05D 1/0088*** (2013.01)

(58) **Field of Classification Search**

CPC G01S 13/881; G01S 13/931; G08G 1/167; A01D 34/008; G05D 1/0088; G06F 17/14; B25J 13/00; H04L 5/06; H04B 1/001

USPC 700/250, 255, 258; 701/300–301; 702/77

See application file for complete search history.

(56) **References Cited**

U.S. PATENT DOCUMENTS

6,300,737	B1 *	10/2001	Bergvall	A01D 34/008 180/167
6,556,916	B2 *	4/2003	Waite	G08G 1/042 340/933
8,725,316	B2 *	5/2014	Thompson	A01D 34/008 701/2
2005/0283309	A1	12/2005	Sonoura	
2010/0161204	A1	6/2010	Jou et al.	
2012/0029754	A1	2/2012	Thompson et al.	
2013/0211625	A1	8/2013	Thompson et al.	
2014/0088761	A1	3/2014	Shamlian et al.	

FOREIGN PATENT DOCUMENTS

DE	69829411	1/2006
WO	WO2010046260	4/2010
WO	WO2013185622	12/2013

OTHER PUBLICATIONS

European Search Report for GB1612759.9 dated Jan. 23, 2017.
German Search Report for App. Ser. No. 102016009087.1 dated May 12, 2017.

* cited by examiner

Primary Examiner — Bao Long T Nguyen
(74) *Attorney, Agent, or Firm* — Rathe Lindebaum LLP

(57) **ABSTRACT**

A boundary signal detection system distinguishes a valid boundary signal for a target region from an extraneous boundary signal for a neighboring region. The system includes electronics that convert the candidate signal from a time domain to a frequency domain to identify at least one embedded frequency in the candidate, that compare the at least one embedded frequency in the candidate signal to at least one predetermined embedded frequency of the valid boundary signal, and that identify the candidate signal as the valid boundary signal based upon the comparison.

19 Claims, 7 Drawing Sheets

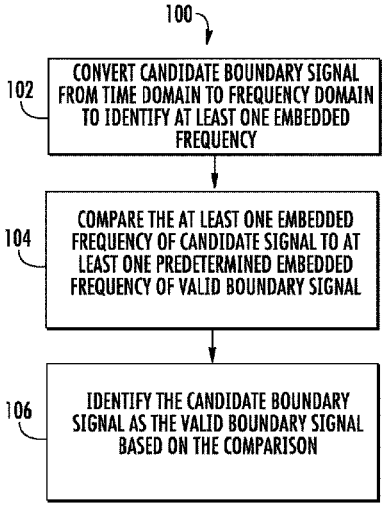

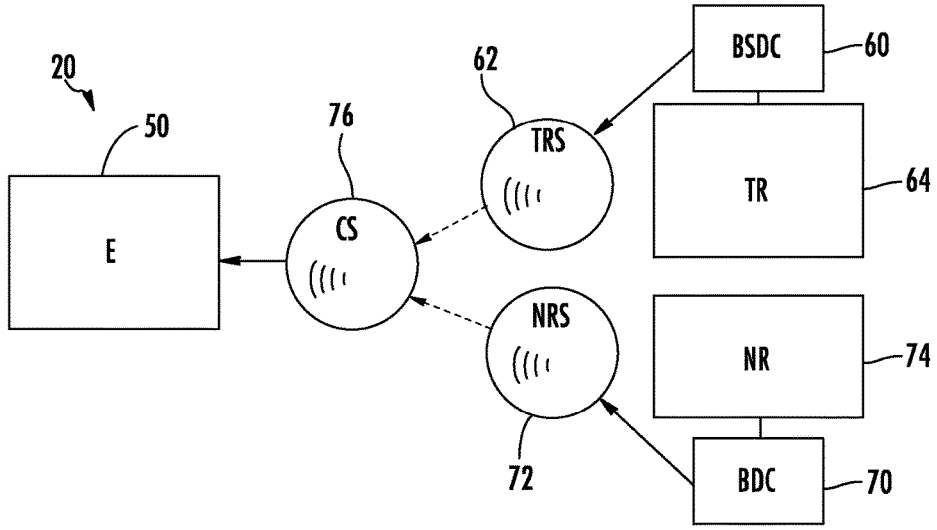

FIG. 1

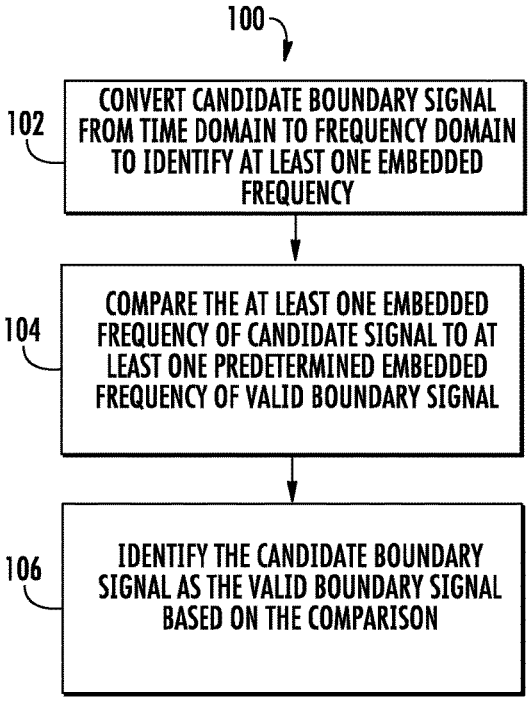

FIG. 2

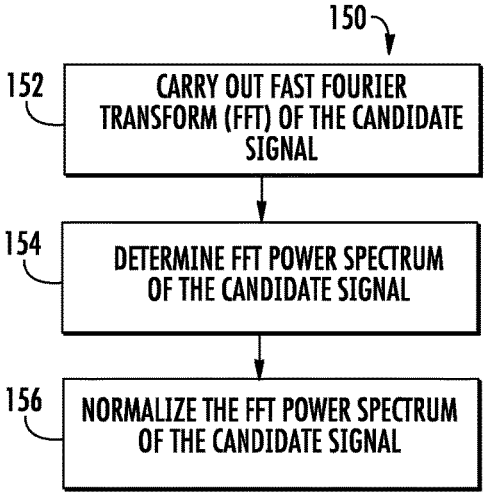

FIG. 3

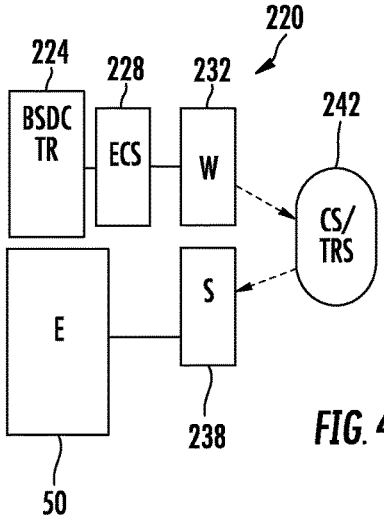

FIG. 4

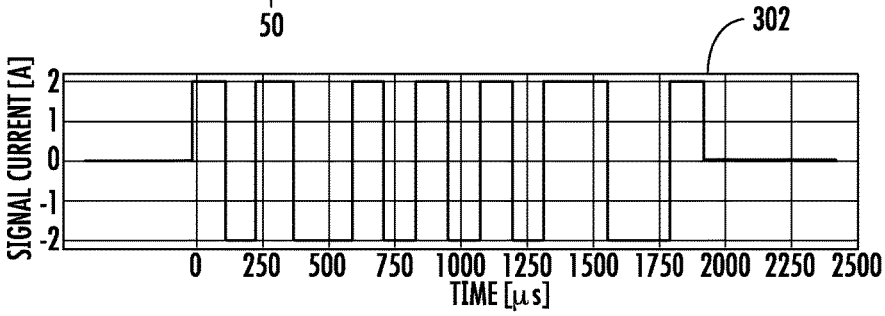

FIG. 5A

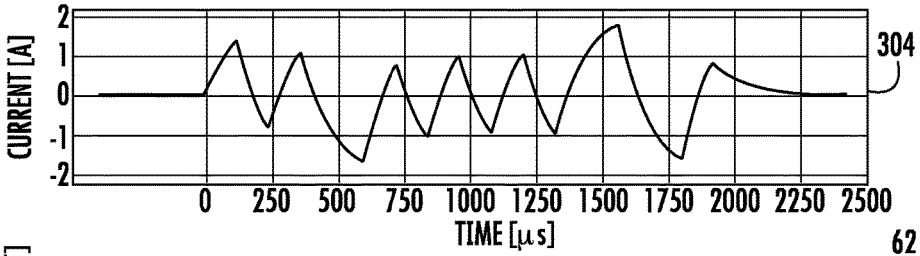

FIG. 5B

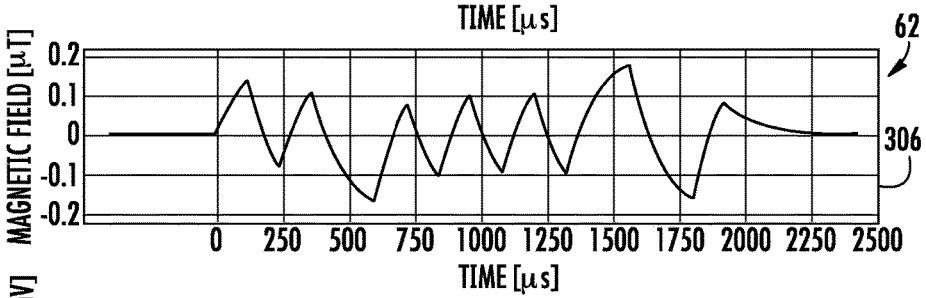

FIG. 5C

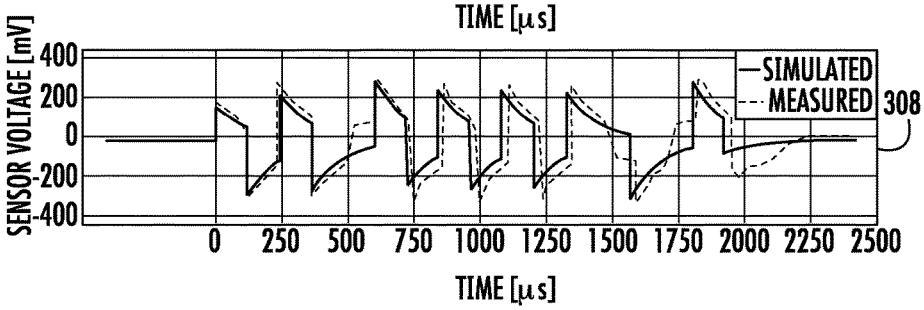

FIG. 5D

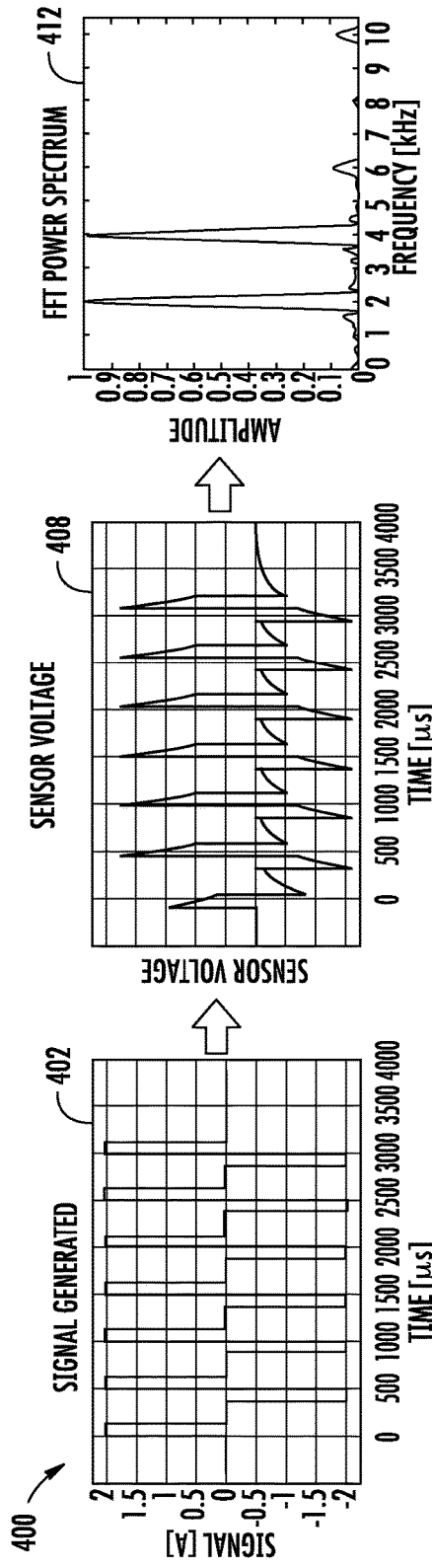
400
SIGNAL GENERATED
402
SIGNAL [A]
2
1.5
1
0.5
0
-0.5
-1
-1.5
-2
0 500 1000 1500 2000 2500 3000 3500 4000
TIME [μs]
SENSOR VOLTAGE
408
SENSOR VOLTAGE
0 500 1000 1500 2000 2500 3000 3500 4000
TIME [μs]
AMPLITUDE
FFT POWER SPECTRUM
412
AMPLITUDE
1
0.9
0.8
0.7
0.6
0.5
0.4
0.3
0.2
0.1
0
0 1 2 3 4 5 6 7 8 9 10
FREQUENCY [kHz]

FIG. 6

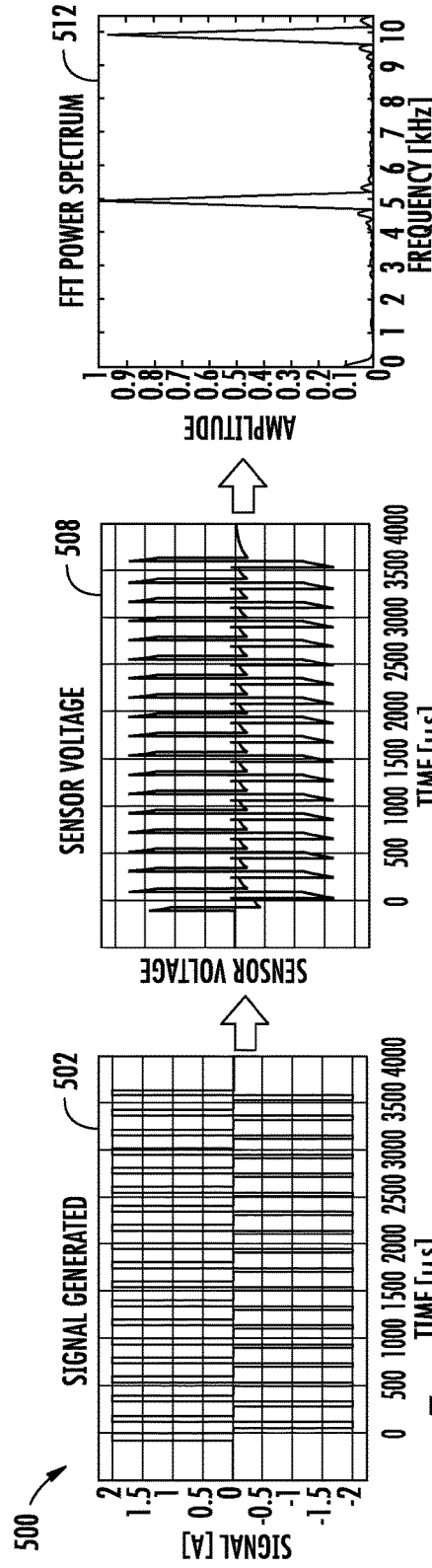
500
SIGNAL GENERATED
502
SIGNAL [A]
2
1.5
1
0.5
0
-0.5
-1
-1.5
-2
0 500 1000 1500 2000 2500 3000 3500 4000
TIME [μs]
SENSOR VOLTAGE
508
SENSOR VOLTAGE
0 500 1000 1500 2000 2500 3000 3500 4000
TIME [μs]
AMPLITUDE
FFT POWER SPECTRUM
512
AMPLITUDE
1
0.9
0.8
0.7
0.6
0.5
0.4
0.3
0.2
0.1
0
0 1 2 3 4 5 6 7 8 9 10
FREQUENCY [kHz]

FIG. 7

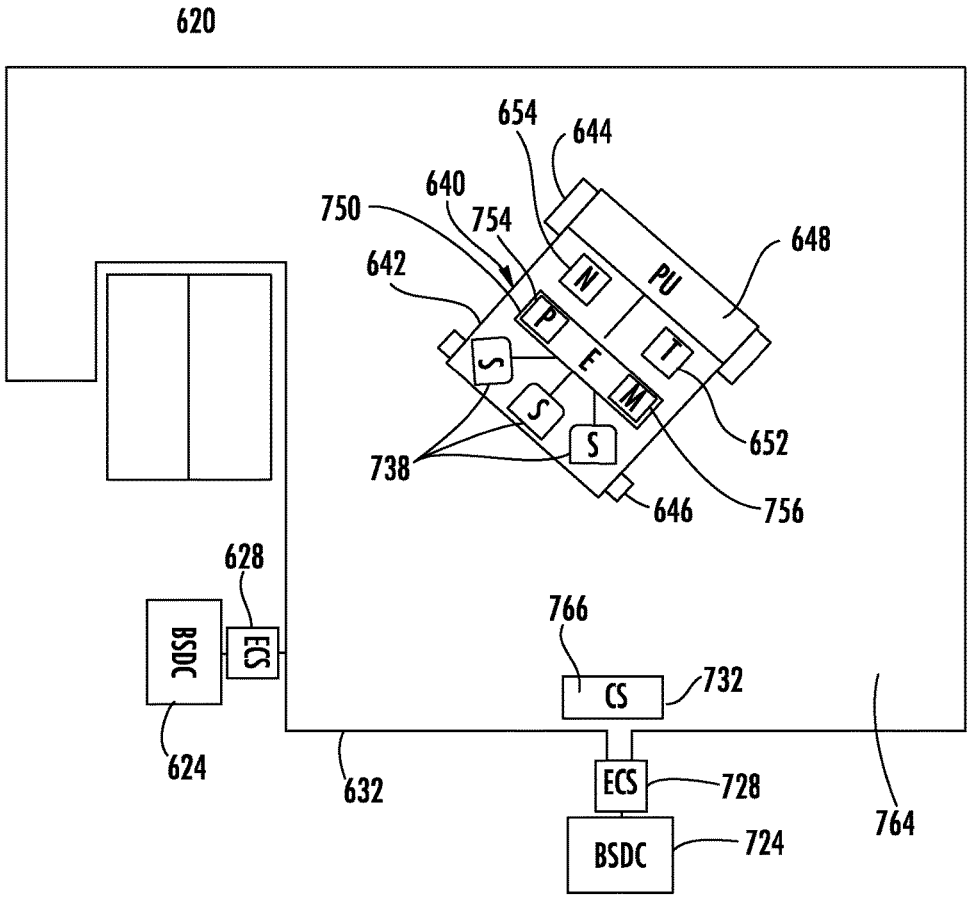
620
654
644
640
750
754
648
642
N
PU
P
T
S
E
M
S
S
652
738
646
756
628
766
BSDC
ECS
CS
732
624
632
ECS
728
764
BSDC
724

FIG. 8

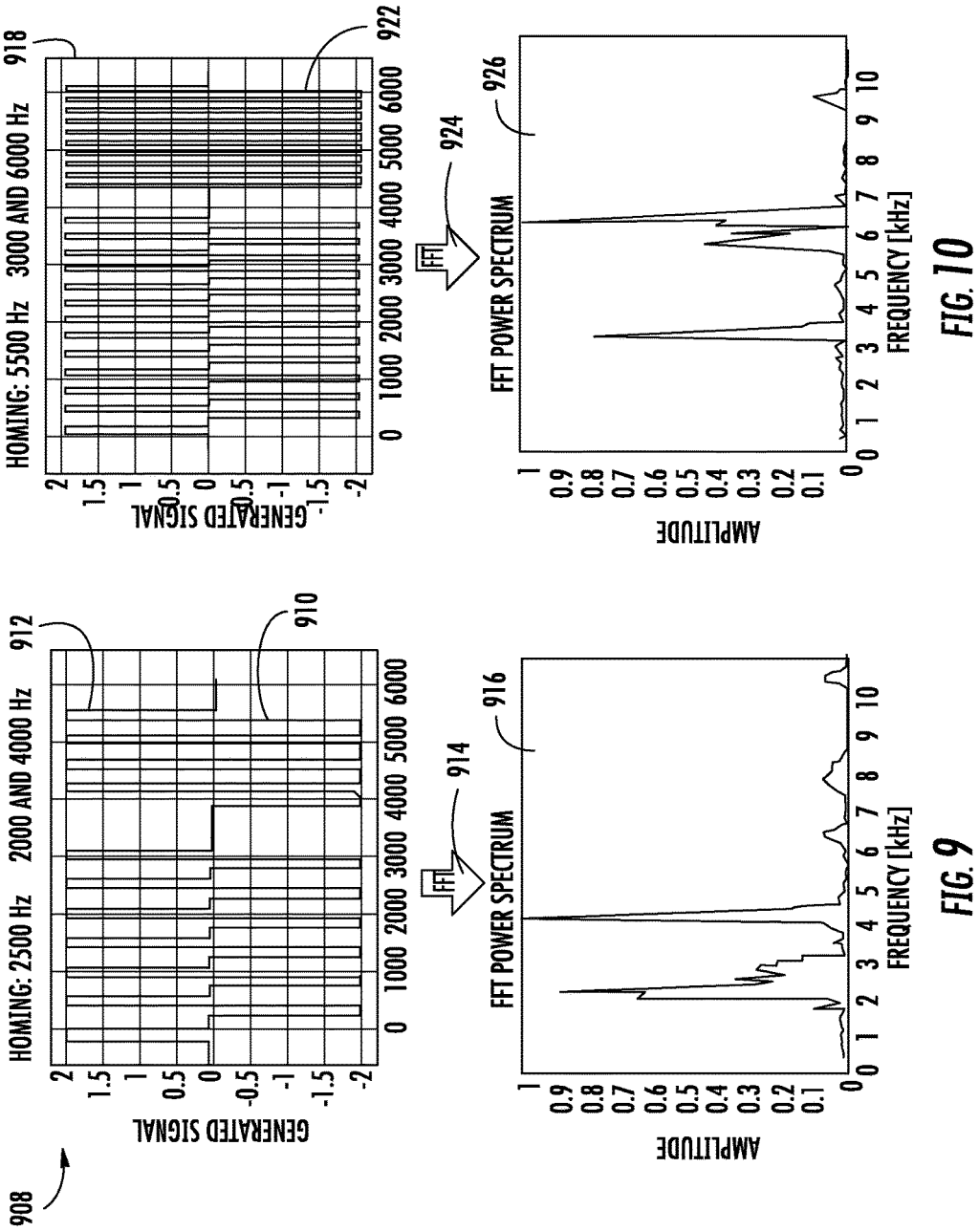
908
912
HOMING: 2500 Hz 2000 AND 4000 Hz
910
GENERATED SIGNAL
2
1.5
1
0.5
0
-0.5
-1
-1.5
-2
0 1000 2000 3000 4000 5000 6000
914
FFT
916
FFT POWER SPECTRUM
AMPLITUDE
1
0.9
0.8
0.7
0.6
0.5
0.4
0.3
0.2
0.1
0
0 1 2 3 4 5 6 7 8 9 10
FREQUENCY [kHz]
FIG. 9
918
HOMING: 5500 Hz 3000 AND 6000 Hz
922
GENERATED SIGNAL
924
FFT
926
FFT POWER SPECTRUM
AMPLITUDE
FREQUENCY [kHz]
FIG. 10

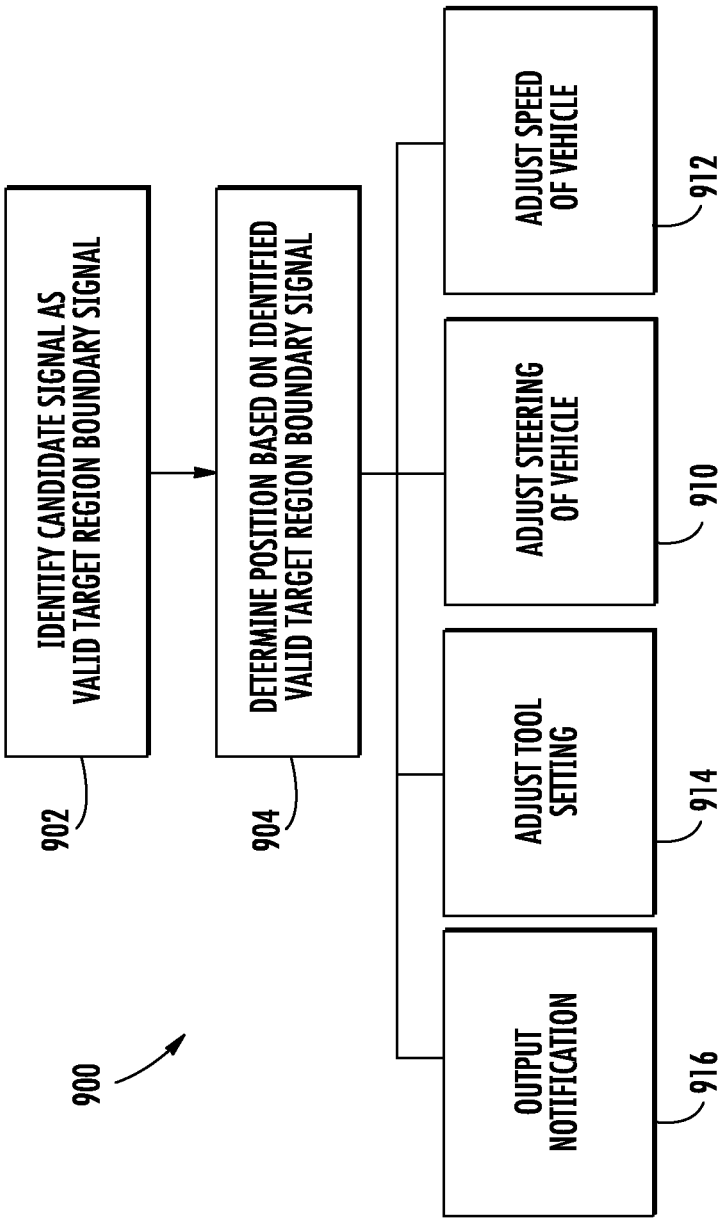
IDENTIFY CANDIDATE SIGNAL AS VALID TARGET REGION BOUNDARY SIGNAL
902
DETERMINE POSITION BASED ON IDENTIFIED VALID TARGET REGION BOUNDARY SIGNAL
904
ADJUST SPEED OF VEHICLE
912
ADJUST STEERING OF VEHICLE
910
ADJUST TOOL SETTING
914
OUTPUT NOTIFICATION
916
900

FIG. 11

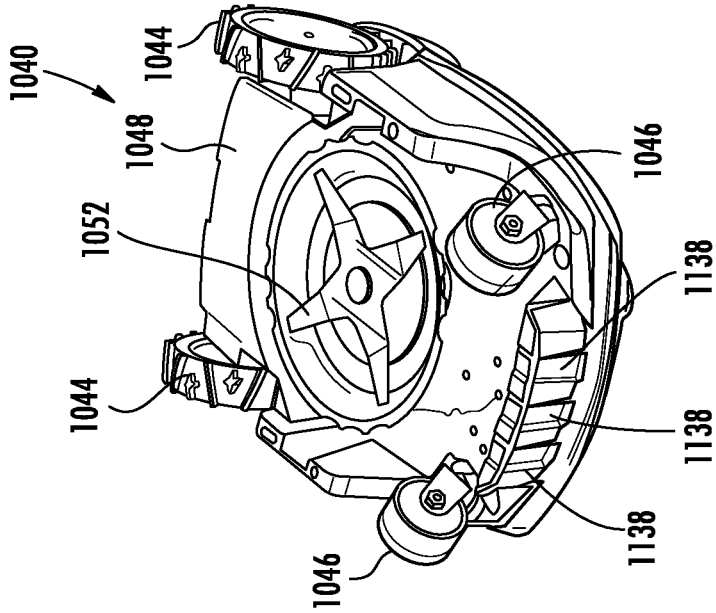
1040
1044
1048
1046
1052
1138
1044
1138
1138
1046

FIG. 13

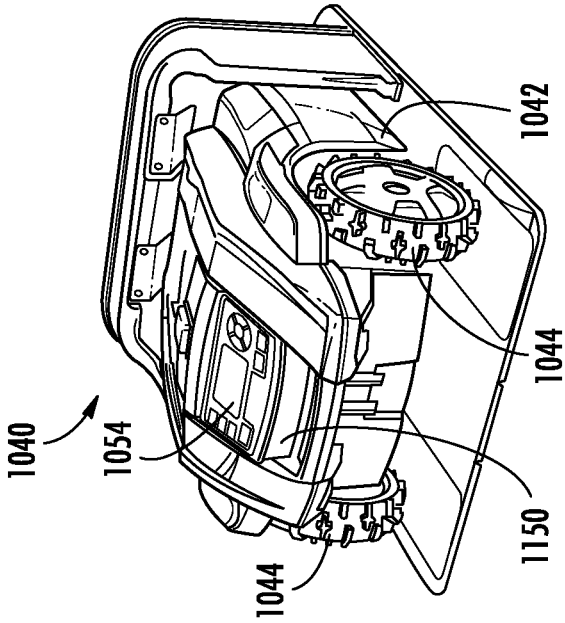
1042
1044
1040
1054
1150
1044

FIG. 12

BOUNDARY SIGNAL DETECTION

BACKGROUND

Boundary signals are used to identify the boundary or perimeter of a structure or region. In some circumstances, the use of such boundary signals is difficult due to extraneous signals or other boundary signals corresponding to other nearby or neighboring regions.

BRIEF DESCRIPTION OF THE DRAWINGS

FIG. **1** is a schematic diagram of an example boundary signal detection system.

FIG. **2** is a flow diagram of an example method for distinguishing a valid target region boundary signal from an extraneous signal.

FIG. **3** is a flow diagram of an example method for converting a candidate boundary signal from a time domain to a frequency domain.

FIG. **4** is a schematic diagram of another example boundary signal detection system.

FIGS. **5**A-**5**D are graphs illustrating the generation, transmission, and sensing of any target region boundary signal.

FIGS. **6** and **7** are graphs illustrating the generation, reception, and transformation of two different target region boundary signals.

FIG. **8** is a schematic diagram of another example boundary signal detection system.

FIGS. **9** and **10** are graphs illustrating two example generated voltage signals or inputs to a signal generator and subsequent resulting frequency domains.

FIG. **11** is a flow diagram illustrating an example method for utilizing and identifying a valid target region boundary signal.

FIG. **12** is a rear perspective view of an example vehicle comprising an example boundary signal detection system.

FIG. **13** is a bottom perspective view of the vehicle of FIG. **12**.

DETAILED DESCRIPTION OF EXAMPLES

FIG. **1** schematically illustrates an example boundary signal detection system **20**. As will be described hereafter, boundary signal detection system **20** distinguishes or discerns between a chosen or valid boundary signal for a particular intended or target region and those extraneous boundary signals that may correspond to regions that are not of interest and that may overlap the valid boundary signal in the time domain. As a result, system **20** is able to filter out or ignore such extraneous boundary signals while acting upon the identified valid boundary signal for the particular target region.

As schematically shown by FIG. **1**, boundary signal detection system **20** comprises electronics **50**. Electronics **50** comprises electronic circuitry configured to carry out the example method **100** outlined in FIG. **2**. In one implementation, electronics **50** comprises at least one application-specific integrated circuit (ASIC). In one implementation, electronics **50** comprises at least one processing unit and associated memory.

In one implementation, the term "processing unit" shall mean a presently developed or future developed processing unit that executes sequences of instructions contained in a memory. Execution of the sequences of instructions causes the processing unit to perform steps such as generating control signals. The instructions may be loaded in a random access memory (RAM) for execution by the processing unit from a read only memory (ROM), a mass storage device, or some other persistent storage device or non-transitory computer-readable medium. In other embodiments, hard wired circuitry may be used in place of or in combination with software instructions to implement the functions described. For example, electronics **50** may be embodied as part of one or more application-specific integrated circuits (ASICs). Unless otherwise specifically noted, the controller is not limited to any specific combination of hardware circuitry and software, nor to any particular source for the instructions executed by the processing unit.

As schematically shown by FIG. **1**, electronics **50** is operable in an environment in which multiple boundary signal driving circuits output boundary signals corresponding to associated regions. In one implementation, a "region" when referring to a target region or a neighboring region, for example, refers to a perimeter or edge, wherein the perimeter or edge may be the perimeter or edge defining the inside of a closed area, surface or structure, the outside of a closed area, surface or structure and/or a portion of either the inside or outside perimeter edge of an area, surface or structure.

In the example illustrated, boundary driving circuit **60** (schematically shown) outputs a chosen, valid or target region signal (TRS) **62** that identifies the boundaries of a target region **64**. In the example illustrated, boundary driving circuit **70** (schematically shown) outputs an extraneous or neighboring region signal (NRS) **72** for the boundary of a neighboring region **74**, a region that is adjacent to target region **64** or that is spaced from, but sufficiently nearby target region **64** such that electronics **50** receives extraneous boundary signal **72**. In the example illustrated, electronics **50** operate in an environment in which electronics **50** is capable of receiving a candidate boundary signal **76**. As indicated by broken line arrows, in some circumstances, candidate signal **76** comprises a valid boundary signal **62** from circuit **60** for the target region **64**. However, in other circumstances, candidate signal **76** comprises an extraneous boundary signal **72** from boundary signal driving circuit **70** for neighboring region **74**. In some circumstances, valid boundary signal **62** and extraneous boundary signal **72** mix, overlap or are concurrently received by electronics **50**. As a result, candidate signal **76** comprises the valid boundary signal **62**, the extraneous boundary signal **72** or a combination of signals **62**, **72**.

Electronics **50** determines whether candidate signal **76** is either the target region signal **62** originating from boundary signal driving circuit **60** or whether candidate signal **76** is the neighboring region signal **72** originating from a different source other than boundary signal driving circuit **60**. In circumstances where candidate signal **76** comprises an amalgamation of valid and extraneous boundary signals, electronics **50** discerns those portions of the candidate signal **76** that are valid boundary signals for the target region of interest from those portions that are not.

In one implementation, if the candidate signal **76** is identified as comprising or including a valid boundary signal, the valid boundary signal is analyzed and acted upon. For example, in one implementation, electronics **50** utilizes the valid boundary signal to determine the positioning of a structure, object, or vehicle relative to the boundaries of the target region **64**. In one implementation, electronics **50** utilizes the determined positioning of the structure, object, or vehicle to notify an operator or other nearby persons or nearby animals of the positioning or distance separating the structure, object, or vehicle from the boundary. For example, a warning light, audible sound or other notification is

provided. In another implementation, electronics **50** utilizes the determined positioning of a vehicle to assist in steering, driving or maneuvering of a vehicle, whether it be a robotic vehicle or robotic appliance or whether the vehicle be operated by a person, wherein electronics **50** temporarily assumes steering or maneuvering control. For example, based upon the determined positioning, electronics **50** adjusts the speed at which a vehicle is moving and/or a direction in which the vehicle is moving. In yet another implementation, electronics **50** additionally or alternatively utilizes the determined positioning of the vehicle relative to the boundary to make decisions and to control a tool or tools carried by the vehicle. For example, in the case of a mower, electronics **50** utilizes the determined positioning of the vehicle as a basis for adjusting a height of the cutting deck, the speed of the cutting blade and/or whether a blade is driven or its rotation is stopped or braked.

In some implementations, upon identifying that a candidate signal **76** or portions of a candidate signal **76** is not a valid signal, as not originating from boundary signal driving circuit **60**, electronics **50** stores characteristics of the "invalid" extraneous boundary signal. In such a circumstance, electronics **50** utilizes stored characteristics of the extraneous boundary signal to more quickly identify subsequently received candidate signals as extraneous boundary signals. For example, in one implementation, once an invalid or extraneous boundary signal has been identified and its characteristics have been stored, electronics **50**, upon receiving a subsequent different candidate signal **76** begins its analysis by immediately comparing the subsequently received candidate signal **76** to those characteristics of signals already previously determined as being extraneous.

In one implementation, electronics **50** determines whether a candidate signal **76** is either a valid boundary signal or an extraneous boundary signal according to the method **100** depicted in FIG. **2**. As indicated by block **102** in FIG. **2**, electronics **50** converts candidate boundary signal **76** from a time domain to a frequency domain signal. According to one implementation of system **20**, boundary signal driving circuit **60** embeds at least one predetermined frequency in the valid target boundary region signal **62**. The embedded frequency or embedded combination of frequencies serve as a signature identifying the valid signal **62** as originating from boundary signal driving circuit **60** and corresponding to target region **64**. By converting candidate boundary signal **76** from a time domain to a frequency domain, electronics **50** facilitates extraction and analysis of the embedded frequencies.

As indicated by block **104** of FIG. **2**, electronics **50** compares the at least one embedded frequency of the candidate signal **76** to at least one predetermined embedded frequency of a valid boundary signal **62**. As noted above, boundary signal driving circuit **60** generates valid target region boundary signal **62** having predetermined embedded frequencies. Such predetermined embedded frequencies and/or characteristics of such predetermined embedded frequencies are communicated to or otherwise obtained or acquired by electronics **50**. For example, in one implementation, electronics **50** stores a lookup table or other list of embedded frequencies or characteristics of embedded frequencies that correspond to valid target region boundary signals, such as signal **62**. In one implementation, boundary signal driving circuits **60** are provided by the same manufacturer, supplier, distributor or the like and are each configured to output boundary region target signals **62** having different embedded frequencies or different combinations of embedded frequencies to reduce a likelihood that neighboring boundary signal driving circuits from the same manufacturer, supplier, distributor or the like inadvertently output boundary signals having the same characteristic embedded frequencies.

As indicated by block **106** in FIG. **2**, electronics **50** identifies the candidate boundary signal **76** as a valid target region boundary signal **62** based upon the comparison. Alternatively, electronics **50** identifies a candidate boundary signal **76** as an invalid or extraneous boundary signal **72**. As described above, if the candidate signal **76** is identified as comprising or including a valid boundary signal, the valid boundary signal is analyzed and acted upon.

FIG. **3** is a flow diagram illustrating one example method **150** by which electronics **50** converts candidate boundary signal **76** from a time domain to a frequency domain for determining whether a candidate signal **76** is a valid target region boundary signal **62**. As indicated by block **152**, electronics **50** carries out a Fourier transform of the candidate signal. In the example illustrated, electronics **50** carry out a fast Fourier transform of the candidate signal.

As indicated by blocks **154** and **156**, electronics **50** determine a fast Fourier transform power spectrum of the candidate signal **76** and then normalize the fast Fourier power transform of the candidate signal **76**. By determining a normalized fast Fourier power spectrum, electronics **50** facilitates more reliable comparisons in block **104** of method **100** shown in FIG. **2**. In other implementations, such comparisons of the embedded frequency in block **104** of method **100** are alternatively carried out using fast Fourier power spectrum that are not normalized per block **156** or using Fourier transforms of the candidate signal **76** or fast Fourier transforms of the candidate signal **76** directly, without determination of a power spectrum or normalization.

FIG. **4** schematically illustrates boundary signal detection system **220**, an example boundary signal detection system **20**. Boundary signal detection system **220** comprises boundary signal driving circuit **224**, electrical current source **228**, wire **232**, boundary signal sensor **238** and electronics **50**. Boundary signal driving circuit **224** comprises a circuit that outputs control signals that control electrical current source **228**.

Electrical current source **228** is electrically connected to wire **232** and provides an electrical current along wire **232** based upon the control signals received from boundary signal driving circuit **224**. The control signals from boundary signal driving circuit **224** cause electrical current source **228** to output an electrical current to wire **232** which fluctuates over time to define signal **62**. The electrical current fluctuates over time with at least one predetermined embedded frequency.

Wire **232** comprises an electrically conductive line extending along or proximate to a boundary of a target region, such as target region **64**. In one implementation, wire **232** is buried below the surface. The electrical current flowing through the wire creates a magnetic field **242** about wire **232**. This magnetic field **242** fluctuates over time and serves as target region boundary signal **62**. This magnetic field **242** that fluctuates over time with at least one frequency that is equal to or within a predefined range of at least one predefined frequency known to electronics **50** as a signature or signatures of a valid target region boundary signal. This magnetic field **242** constitutes the valid signal **62** for the target region and is the initial candidate signal **76** that is later determined to be valid signal **62** by electronics **50**.

Sensor **238** comprises a device that picks up or acquires candidate signals. In the example illustrated, sensor **238** comprises an inductor which, when exposed to the magnetic

field **242**, produces an electrical current. Sensor **238** converts the candidate signal **76**/target region boundary signal **62**, in the form of magnetic field **242**, to an electrical current. At least one characteristic of the electrical current is sensed, wherein signals from the sensed electrical current are used by electronics **50** to discern the candidate signal **76** as either a valid target region boundary signal **62** or an extraneous neighboring region signal **72**. In circumstances where electronics **50** has determined that the candidate signal **76** is indeed a valid target region boundary signal **62**, electronics **50** then uses the valid target region boundary signal **62** to determine relative positioning of wire **232** and the corresponding boundaries of target region **64**.

In the example illustrated, electronics **50** determines a voltage that is associated with the electrical current. In the example illustrated, electronics **50** transforms the pattern of the sensed voltage **308** from a time domain to a frequency domain and compares it with at least one embedded frequency of the candidate signal **76** to at least one predetermined embedded frequency that is known to electronics **50** to correspond to a valid boundary signal. Based on the comparison, electronics **50** determines whether the candidate boundary signal **76** is a valid boundary signal **62** as described above with respect to method **100** in FIG. **2**.

FIGS. **5**A-**5**D are graphs illustrating generation, transmission and reception of a target region boundary signal **62** by system **220**. FIG. **5**A is a graph of one example target region boundary signal generation control signal **302** that is output by boundary signal driving circuit **224** to electrical current source **228**. Control signal **302** has a pattern corresponding to the target region boundary signal **62** that is subsequently sensed by sensor **238**. FIG. **5**B is a graph illustrating an example current signal **304** along wire **232** as output by electrical current source **228** in response to the example control signals **302** shown in FIG. **5**A. FIG. **5**C is a graph illustrating an example of magnetic field **242**, magnetic field **306**, serving as a target region boundary signal **62**. Magnetic field **306** is a result of the example electrical current **304** carried along wire **232** and as illustrated in FIG. **5**B. FIG. **5**D is a graph depicting a voltage **308** over time of the electrical current induced in sensor **238** as a result of the example magnetic field **306** illustrated in FIG. **5**C. The voltage **308** fluctuates in a pattern, with one or more frequencies, corresponding to the pattern of the target region control signal **306** and the pattern of the initial control signal **302** and output electrical current **304**. The voltage **308** fluctuates with at least one embedded frequency equal to or within a predefined range of at least one frequency known to electronics **50** as a signature or signatures of a valid target region boundary signal.

FIGS. **6** and **7** illustrate the generation and conversion of two different example target region boundary signals by system **224** to facilitate the determination of whether the candidate signal is associated with a target region or is an extraneous signal. FIG. **6** illustrates the generation, reception and transformation of a first target region boundary signal **400**. As shown by FIG. **6**, boundary signal driving circuit **224** generates an example target region boundary signal generation control signal **402**, similar to signal **302** described above. As a result, a corresponding electrical current is output to wire **232** results in a corresponding magnetic field about wire **232** (shown in FIG. **4**).

The magnetic field induces an electrical current in sensor **238**, wherein sensor **238** outputs a sensor voltage signal **408** to electronics **50**. Electronics **50** converts the sensor voltage signal **408**, based upon the target region boundary signal **62**, from a time domain to a frequency domain. In the example illustrated, electronics **50** carries out method **150** described above by carrying out a fast Fourier transform of the voltage signal, by determining a fast Fourier transform power spectrum of the voltage signal and by normalizing the fast Fourier power spectrum of the voltage signal **408** to produce the fast Fourier normalized power spectrum **412**. Electronics **50** compares at least one characteristic of the fast Fourier normalized power spectrum **412** to at least one signature fast Fourier normalized power spectrum characteristic of a valid target region boundary signal to confirm that the signal is for the boundary of a selected or target region.

In the example illustrated, the control signals **402** have embedded therein multiple predefined frequencies. Because multiple predefined frequencies are embedded within the control signals, and ultimately the magnetic target region boundary signal **242** and sensor voltage signal **408**, the likelihood of an extraneous neighboring region signal **72** being incorrectly determined as a target region signal is reduced. For example, in such an implementation, to qualify as a valid target region boundary signal, the candidate signal must be found to possess particular signature combination of multiple embedded frequencies assigned to a valid target region boundary signal. In other words, in circumstances where a valid target region boundary signal is defined, and known to electronics **50**, as a signal having a first embedded frequency and a second embedded frequency, the candidate signal must exhibit characteristics sufficiently close to or within both a predefined range of characteristics of the first embedded frequency and a predefined range of characteristics of the second embedded frequency. Although the example illustrates the embedding of two different frequencies within the target region boundary signal, in other implementations, more than two frequencies are embedded within the target region boundary signal.

In the example illustrated, the frequencies embedded into the target region boundary signal are whole multiples of one another. In one implementation, the frequencies embedded into the target region boundary signal are doubles of one another. For example, in one implementation, a target region boundary signal may have frequencies of 2 and 4 kHz. In another implementation, the target region boundary signal may have frequencies of 5 and 10 kHz. In another implementation, the target region boundary signal may have frequencies of 3.5 and 7 Hz. Because the target region boundary signals have frequencies that are whole multiples of one another, boundary signal driving circuit **224** more easily generates the control signals for driving the target region boundary signal. As a result, boundary signal driving circuit **224** is less complex and less costly. In other implementations, the multiple embedded frequencies of the target region boundary signal may have other relative values.

FIG. **7** illustrates the generation, reception and transforming of a second target region boundary signal **500**. As with signal **400**, signal **500** begins as a target region boundary signal generation control signal **502** which results in a corresponding electrical current signal along wire **232** and a corresponding magnetic field signal which induces an electrical current within sensor **238**. As a result of induced electrical current, the sensor **23** outputs a sensor voltage **508** to electronics **50**. Electronics **50** transforms the sensor voltage **508** according to method **150** described above to produce the normalized fast Fourier transform power spectrum **512**. Characteristics of the normalized fast Fourier power spectrum **512** are compared to signature characteristics of a valid target region boundary signal, known to electronics **50**, to confirm that the signal is for the boundary of a selected or target region. As with signal **400**, signal **500**

has embedded therein multiple frequencies, wherein signal **500** must be found to possess the particular signature combination of multiple embedded signature frequencies assigned to a valid target region boundary signal to be deemed a valid target region boundary signal.

In the example illustrated, electronics **50** compares the normalized fast Fourier power spectrum of a signal **412**, **512** to the predefined or signature normalized fast Fourier transform power spectrum of a valid target region boundary signal by checking for peaks in the normalized fast Fourier power transform spectrum of the candidate signal that are near predefined fundamental frequencies assigned as signatures for a valid target region boundary signal. If such peaks are found in the normalized fast Fourier power transform spectrum of the candidate signal, electronics **50** determines whether such peaks satisfy a predefined frequency location threshold and a predefined magnitude threshold assigned to a valid target region boundary signal. In other words, electronics **50** determines whether the location of the peaks is within a predefined range or within a predefined distance from a corresponding peak that would be found in a normalized fast Fourier power transform of a valid target region boundary signal. Electronics **50** further determines whether the peak of the normalized fast Fourier power transform spectrum of the candidate signal has a magnitude that satisfies a predefined threshold based upon the corresponding peak that would be found in a normalized fast Fourier power transform of a valid target region boundary signal. If peaks are found and if the peaks (A) are within a predefined range of corresponding peaks associated with a valid target region boundary signal and (B) have a magnitude that satisfies the predefined threshold for the corresponding peak associated with a valid target region, electronics **50** determines that the candidate signal is a valid target region boundary signal. In one implementation, electronics **50** applies a frequency location threshold of 150 Hz and it peak magnitude threshold of 0.15, wherein the fast Fourier power spectrum is normalized so that zero is minimum and one is maximum.

In other implementations, electronics **50** utilizes other criteria when comparing the characteristics of the at least one embedded frequency of a candidate signal to the at least one predetermined or signature characteristics of the at least one embedded frequency of a valid boundary signal. For example, in another implementation, electronics **50** omits the identification of peaks in the normalized fast Fourier power transfer spectrum of the candidate signal, but checks whether the normalized fast Fourier powered spectrum of the candidate signal exhibits a signal value within a predefined range or distance from a signature peak of the normalized fast Fourier transform power spectrum that also satisfies a predefined magnitude threshold. In yet other implementations, other characteristics of the Fourier transform of the candidate signal are compared to corresponding signature characteristics of a Fourier transform of what is predefined as a valid target region boundary signal.

FIG. **8** schematically illustrates boundary signal detection system **620**, an example boundary signal detection system **20**. System **620** comprises boundary signal driving circuit **624**, electrical current source **628**, wire **632**, boundary signal driving circuit **724**, electrical current source **728**, wire **732** and vehicle **640**. Boundary signal driving circuits **624**, **724** are similar to boundary signal driving circuit **224** described above. Boundary signal driving circuits **624**, **724** output different boundary signal generation control signals to their respective electrical current sources **628**, **728** to drive electrical current signals on the respective wires **632**, **732**. Electrical current source **628**, **728** are similar to electrical current source **228** described above. Electrical current source **628** outputs an electrical current onto wire **632** while electrical current source **728** outputs an electrical current onto wire **732** based upon the boundary signal generation control signals received from circuits **624** and **724**, respectively.

Wire **632** comprise an electrically conductive line extending proximate to or along boundaries of a target region **764**. In other implementations, wire **632** has other sizes and shapes depending upon the characteristics of target region **764**. Similarly, wire **732** comprise an electric conductive line extending proximate to or along boundaries of a second target region **766**. In the example illustrated, wire **632** defines the outer boundary of target region **764** in which vehicle **640** is to be maintained. In other words, vehicle **640** is to move within target region **764** while being contained within target region **764**. In the example illustrated, wire **732** defines the outer boundary of target region **766** which resides within target region **764**. Target region **766** is a region within target region **764** in which vehicle **640** is not to intercept or cross into. In the example illustrated, wire **732** serves to output a target region boundary signal that serves as a homing signal to assist vehicle **640** in locating a certain home position within region **764**. In one implementation, wire **732** serves as homing signal for a charging station CS for vehicle **640**. In other implementations, wire **732** serves as a homing signal for region **766** which is used for other purposes.

Vehicle **640**, schematically shown an enlarged for purposes of illustration, comprises frame **642**, traction drivers **644**, **646**, propulsion unit **648**, tool **652**, notification device **654**, sensors **738** and electronics **750**. Frame **642** comprise a chassis or other structure supporting the remaining components of vehicle **640**. Traction driver **644** comprise ground engaging members that, upon being driven, move vehicle **640**. In the example illustrated, traction drivers **644**, **646** comprise wheels. In one implementation, wheel **644**, left wheel **644** and the right wheel **644**, are independently drivable to facilitate steering of vehicle **640**. In another implementation, the angular positioning of traction driver **646** is adjustable to steer vehicle **640**. In yet other implementations, traction drivers **644** comprise tracks or other structures that facilitate the driving a vehicle **640**.

Propulsion unit **648** comprise a device carried by frame **640** that powers and drives traction drivers **644** and/or traction drivers **646**. In one implementation, propulsion unit **648** comprises an electric motor operably coupled to traction drivers **644** and/or traction drivers **646** by transmission. In yet another implementation, Paul unit **648** comprises an internal combustion engine operably coupled to traction drivers **644** and/or traction drivers **646** by transmission.

Tool **652** comprises at least one working device carried by vehicle **640**. In one implementation, tool **652** interacts with the underlying terrain and/or vegetation on the underlying terrain. In one implementation, tool **652** comprises a blade that is rotatably driven by propulsion unit **648** or a separate independent rotational drive. In one implementation, the blade is to be rotatably driven about a vertical axis to cut vegetation, such as grass. In one implementation, tool **652** comprises a mower blade. In another implementation, the blade is rotatable about a horizontal axis, such as with an edger. As other implementations, tool **652** interacts with soil, such as with a cultivator or the like. In some implementations, tool **652** is operable at different non-zero speeds, is operable at different levels of torque or is operable at different heights relative to the underlying terrain. In some

implementations, tool **652** is omitted, wherein vehicle **640** transports or carries a person or a payload.

Notification device **654** comprises a device that outputs visible and/or audible notifications to those proximate to vehicle **640**. In one implementation, notification device **654** comprises a display screen and/or speaker by which a person riding upon vehicle **640** is presented with visible and/or audible information. In one implementation, notification device **654** comprises a light and/or speaker carried by frame **640** by which persons or animals proximate to vehicle **640** are provided with a notification. For example, in one implementation, notification device **654** may comprise a flashing or bright light and/or may comprise a speaker by which an alert is sounded or visibly presented to surrounding animals or persons near vehicle **640** or in the path of vehicle **640**. In still other implementations, notification device **654** comprises a wireless transmitter which is in communication with a display or auditory device remote from vehicle **640**, such as an independent remote monitor or an independent remote portable electronic device such as a smart phone, computer laptop, computer tablet, personal data assistant or the like, wherein notifications or information are transmitted to the remote and independent device for presenting information or notifications to a person.

Sensors **738** comprise sensors carried by vehicle **640** that are configured to sense boundary signals, such as boundary signals emanating from wire **632** and wire **732**. In one implementation, sensors **738** are similar to sensor **238** described above, wherein each of sensors **738** comprises an inductor in which electrical current is induced in response to a magnetic field induced by current through a wire **632** and/or wire **732**. The current profile matches the example target region boundary signal generation control signal **402**, similar to signal **302**. Sensors **738** sense candidate signals **76**, described above, and transmit the resulting voltage signals to electronics **750**.

In the example illustrated, vehicle **640** comprises a forward facing sensor, a leftward and forward facing sensor and a rightward and forward facing sensor. The different orientations of sensors **738** differently respond to the magnetic fields and candidate signals to determine the relative positioning of vehicle **640** with respect to wire **632** and/or wire **732**. Although vehicle **640** is illustrated as comprising the three differently oriented sensors **738**, in other implementations, vehicle **640** comprises a fewer or greater of such sensors at the illustrated or at other orientations and positions.

Electronics **750** are similar to electronics **50** described above. In the example illustrated, electronics **750** comprises circuitry that discerns valid target region boundary signals originating from wire **632** and/or wire **732** from other overlapping extraneous signals. In the example illustrated, electronics **750** comprises a computing device comprising processor **754** and memory **756**. Processor **754** comprises at least one processing unit configured to follow instructions contained in memory **756** which comprises a non-transitory computer-readable medium. In one implementation, the term "processing unit" means a presently developed or future developed processing unit that executes sequences of instructions contained in a non-transitory computer-readable medium or memory. Execution of the sequences of instructions causes the processing unit to perform steps such as generating control signals. The instructions may be loaded in a random access memory (RAM) for execution by the processing unit from a read only memory (ROM), a mass storage device, or some other persistent storage. In other embodiments, hard wired circuitry may be used in place of or in combination with software instructions to implement the functions described. For example, electronics **750** may be embodied as part of one or more application-specific integrated circuits (ASICs). Unless otherwise specifically noted, the controller is not limited to any specific combination of hardware circuitry and software, nor to any particular source for the instructions executed by the processing unit.

Processor **754**, following instructions provided by memory **756**, carries out method **100** described above with respect to FIG. **2**. In one implementation, processor **754**, following instructions provided by memory **756**, converts candidate boundary signals from a time domain to a frequency domain according to the method **150** described above with respect to FIG. **3**. In one implementation, processor **754** compares the at least one embedded frequency of a candidate signal to at least one predetermined signature embedded frequency of a valid boundary signal by checking for peaks in the normalized fast Fourier power transform spectrum of the candidate signal that are near predefined fundamental frequencies assigned as signatures for a valid target region boundary signal. If such peaks are found in the normalized fast Fourier power transform spectrum of the candidate signal, processor **754** determines whether such peaks satisfy a predefined frequency location threshold and a predefined magnitude threshold assigned to a valid target region boundary signal. In other words, processor **754** determines whether the location of the peaks is within a predefined range or within a predefined distance from a corresponding peak that would be found in a normalized fast Fourier power transform of a valid target region boundary signal. Processor **754** further determines whether the peak of the normalized fast Fourier power transform spectrum of the candidate signal has a magnitude that satisfies a predefined threshold based upon the corresponding peak that would be found in a normalized fast Fourier power transform of a valid target region boundary signal. If peaks are found and if the peaks (A) are within a predefined range of corresponding peaks associated with a valid target region boundary signal and (B) have a magnitude that satisfies the predefined threshold for the corresponding peak associated with a valid target region, processor **754** determines that the candidate signal is a valid target region boundary signal. In one implementation, processor **754** applies a frequency location threshold of 150 Hz and it peak magnitude threshold of 0.15, wherein the fast Fourier power spectrum is normalized so that zero is minimum and one is maximum. In other implementations, processor **754** utilizes other criteria when comparing the characteristics of the at least one embedded frequency of a candidate signal to the at least one predetermined or signature characteristics of the at least one embedded frequency of a valid boundary signal.

FIG. **9** illustrates an example sensor voltage **908** which is a result of sensing of signals from each of wire **632** and **732**. In the example illustrated, wire **632** outputs a target region boundary signal having embedded frequencies of 2 kHz and 4 kHz. At the same time, wire **732** outputs a target region boundary signal of 2.5 kHz which serves as a homing signal. Sensor **738** receive both signals which results in the sensor voltage signal **908** having a first portion **910** attributable to the signal from wire **632** and a second portion **912** attributable to the signal from wire **732**. As shown by FIG. **9**, application of a fast Fourier transform **914** to sensor voltage signal **908** and normalization of a power spectrum of the fast Fourier transform results in the normalized fast Fourier transfer power spectrum **916** having unique characteristics for comparison to corresponding characteristics of the signature predetermined normalized fast Fourier transform

power spectrum for the target region to confirm the validity of the voltage signal **908** as being for a valid target region boundary signal and homing signal.

FIG. **10** illustrates another example sensor voltage **1008** which is a result of sensing of signals from each of wire **632** and **732**. In the example illustrated, wire **632** outputs a target region boundary signal having embedded frequencies of 3 and 6 kHz. At the same time, wire **732** outputs a target region boundary signal of 5.5 kHz which serves as a homing signal. Sensor **738** receive both signals which results in the sensor voltage signal **918** having first portion **920** attributable to the signal from wire **632** and a second portion **922** attributable to the singer from wire **732**. As shown by FIG. **9**, application of a fast Fourier transform **924** to sensor voltage signal **918** and normalization of a power spectrum of the fast Fourier transform results in the normalized fast Fourier transfer power spectrum **926** having unique characteristics for comparison to corresponding characteristics of the signature predetermined normalized fast Fourier transform power spectrum for the target region to confirm the validity of the voltage signal **908** as being for a valid target region boundary signal and homing signal.

Once a candidate signal has been identified as a valid target region boundary signal, processing unit **754**, following instructions contained in memory **756**, ask upon the target region boundary signal. FIG. **11** is a flow diagram illustrating an example method **900** carried out by electronics **750** to act upon and use a candidate boundary signal determined to be a valid target region boundary signal. As indicated by block **902**, method **900** is initiated with electronics **750** identifying a candidate boundary signal as a valid target region boundary signal as described above. As indicated by block **904**, electronics **750** then utilizes the valid target region boundary signal to determine the position of vehicle **640** relative to wire **632** and/or wire **732**. As noted above, the intensity of the candidate boundary signal and differences between the candidate boundary signal, as received by each of sensors **738**, is utilized to ascertain the current relative position of vehicle **640**.

As indicated by block **910**, in one implementation in which vehicle **640** comprises a robotic appliance, an unmanned vehicle, electronics **750** utilizes the determined position of vehicle **642** generate control signals that are transmitted to propulsion unit **648**. The control signals adjust the steering of vehicle **640** and adjust the direction in which the robotic appliance is driven. For example, as vehicle **640** approaches or upon reaching wire **632**, electronics **750** outputs control signals causing vehicle **642** turn source avoid intersecting or crossing wire **632**. In another implementation, upon receiving signals indicating that vehicle **640** is low on power, electronics **750** outputs control signals during vehicle **640** to a charging station based upon signals from wire **632** and/or based upon signals from wire **732**. In one implementation, such control signals cause an actuator to redirect the angular orientation or direction of traction driver **646**. In another implementation, such control signals cause traction driver **644** and/or traction driver **646** to be operated at different speeds so as to control the direction in which vehicle **640** is driven.

As indicated by block **912**, in one implementation, electronics **750** adjusts the speed of vehicle **640** based upon the position of vehicle **640** determined block **904**. In one implementation, data **640** comprises a robotic appliance, or the speed is adjusted based upon the position of the robotic appliance within target region **764** or with respect to wire **632** and/or wire **732**. In other implementations where vehicle **640** is a manned vehicle, electronics **750** automatically adjusts the speed of vehicle **642** override a previously manually input speed.

As indicated by block **914**, in some implementations, electronics **750** automatically adjusts a tool setting based upon the position of vehicle **640** relative to wire **632** and/or wire **732** as a determined block **904**. For example, in one implementation, electronics **750** adjusts the speed are torque at which tool **652** is driven and/or a height of the tool. For example, in implementations where vehicle **640** comprises a mower, electronics **750** adjusts the speed at which the cutting blade of tool **652** is driven or the height of the cutting deck of tool **652** based upon the position of vehicle **640** within target region **764**. In implementations where tool **652** of vehicle **640** distributes a material, such as herbicide, insecticide or fertilizer, electronics **750** adjusts such distribution based upon the position of vehicle **640** within target region **764**. For example, based upon the determined position of vehicle **640**, electronics **750** outputs control signals that adjust a rate at which herbicide, insecticide or fertilizer is supplied to a distribution blade or blower of tool **652** and/or adjusts the type of herbicide, insecticide or fertilizer that is currently being supplied or channeled to a distribution blade or blower of tool **652**. In one implementation, electronics **750** automatically outputs control signals to a motor or transmission, wherein the signals adjust a speed at which a distribution blade or blower operates, depending upon the determined position of vehicle **640**, to adjust the dispersion distance of the herbicide, insecticide and/or fertilizer.

As indicated by block **916**, in lieu of or in addition to automatically adjusting steering, speed and/or tool settings, electronics **750** outputs notifications based upon the determined positioning of vehicle **640**. In one implementation, electronics **750** outputs an alert or other notice, audibly are visibly to an operator, other persons or animals using notification device **654**.

FIGS. **12** and **13** illustrate vehicle **1040**, an example of vehicle **640**. In the example, vehicle **1040** comprises a robotic appliance in the form of a robotic mower. Vehicle **1040** comprises frame **1042**, traction drivers **1044**, **1046**, propulsion unit **1048**, tool **1052**, notification device **1054**, sensors **1138** and electronics **1150**. Traction drivers **1044** probably coupled to a driven by propulsion unit **1048** comprising an electric motor powered by rechargeable battery. Tool **1052** comprises a cutting blade to be rotatably driven by propulsion unit **1048** about a vertical axis for cutting grass or other vegetation. Notification device **1054** comprises a display screen and speaker by which surrounding persons may be notified. Sensors **1138** are substantially similar to censor **738** described above. Electronics **1150** are substantially similar to electronics **750** described above. Similar to the operation of electronics **750**, electronics **1150** carried out method **100** described above with respect to FIG. **2**. Electronics **1150** further converts the candidate boundary signal to a time domain to a frequency domain following method **150** of FIG. **3**.

In one implementation, electronics **1150** compares the at least one embedded frequency of a candidate signal to at least one predetermined signature embedded frequency of a valid boundary signal by checking for peaks in the normalized fast Fourier power transform spectrum of the candidate signal that are near predefined fundamental frequencies assigned as signatures for a valid target region boundary signal. If such peaks are found in the normalized fast Fourier power transform spectrum of the candidate signal, electronics **1150** determines whether such peaks satisfy a predefined frequency location threshold and a predefined magnitude

threshold assigned to a valid target region boundary signal. In other words, electronics **1150** determines whether the location of the peaks is within a predefined range or within a predefined distance from a corresponding peak that would be found in a normalized fast Fourier power transform of a valid target region boundary signal. Electronics **1150** further determines whether the peak of the normalized fast Fourier power transform spectrum of the candidate signal has a magnitude that satisfies a predefined threshold based upon the corresponding peak that would be found in a normalized fast Fourier power transform of a valid target region boundary signal. If peaks are found and if the peaks (A) are within a predefined range of corresponding peaks associated with a valid target region boundary signal and (B) have a magnitude that satisfies the predefined threshold for the corresponding peak associated with a valid target region, electronics **1150** determines that the candidate signal is a valid target region boundary signal. In one implementation, electronics **1150** applies a frequency location threshold of 150 Hz and it peak magnitude threshold of 0.15, wherein the fast Fourier power spectrum is normalized so that zero is minimum and one is maximum. In other implementations, electronics **1150** utilizes other criteria when comparing the characteristics of the at least one embedded frequency of a candidate signal to the at least one predetermined or signature characteristics of the at least one embedded frequency of a valid boundary signal.

Upon determining that a candidate signal is a valid target region boundary signal, electronics **1150** carried out method **900** described above with respect to FIG. **11**. In one implementation, electronics **1150** automatically adjusts the steering and speed of vehicle **1040** based upon the position of vehicle **1040** within target region **764** and relative to at least one wire defining at least one target region. In one implementation, electronics limb **50** automatically adjusts the on-off state, the non-zero speed and/or the cutting height of the blade serving as took **1052** based upon the position of vehicle **1040** determined using the candidate signal identified as a valid target region boundary signal. Some implementations, electronics **1150** additionally outputs notifications, such as when or as vehicle **1040** approaches a boundary.

Although the present disclosure has been described with reference to example implementations, workers skilled in the art will recognize that changes may be made in form and detail without departing from the spirit and scope of the claimed subject matter. For example, although different example implementations may have been described as including one or more features providing one or more benefits, it is contemplated that the described features may be interchanged with one another or alternatively be combined with one another in the described example implementations or in other alternative implementations. Because the technology of the present disclosure is relatively complex, not all changes in the technology are foreseeable. The present disclosure described with reference to the example implementations and set forth in the following claims is manifestly intended to be as broad as possible. For example, unless specifically otherwise noted, the claims reciting a single particular element also encompass a plurality of such particular elements.

What is claimed is:

1. A boundary signal detection system to distinguish a valid boundary signal for a target region from an extraneous boundary signal for a neighboring region, the boundary signal detection system comprising:

a vehicle having a propulsion unit, the vehicle carrying a sensor to acquire a candidate boundary signal; and

electronics to:

convert the acquired candidate boundary signal from a time domain to a frequency domain to identify at least one embedded frequency in the candidate boundary signal;

compare the at least one embedded frequency in the candidate boundary signal to at least one predetermined embedded frequency of the valid boundary signal; and

identify the candidate boundary signal as the valid boundary signal based upon the comparison.

2. The boundary signal detection system of claim **1**, wherein the converting of the candidate boundary signal from a time domain to a frequency domain comprises carrying out a Fourier transform of the candidate boundary signal.

3. The boundary signal detection system of claim **1**, wherein the converting of the candidate boundary signal from a time domain to a frequency domain comprises:

carrying out a fast Fourier transform of the candidate boundary signal;

computing the power spectrum of the fast Fourier transform; and

normalizing the fast Fourier transform power spectrum of the candidate boundary signal.

4. The boundary signal detection system of claim **1**, wherein the converting of the candidate boundary signal from a time domain to a frequency domain comprises:

carrying out a fast Fourier transform of the candidate boundary signal;

computing the power spectrum of the fast Fourier transform; and

normalizing the fast Fourier transform power spectrum of the candidate boundary signal; and

wherein the comparing of the at least one embedded frequency in the candidate boundary signal to at least one predetermined embedded frequency of the valid boundary signal comprises:

comparing the normalized fast Fourier transform power spectrum of the candidate boundary signal, proximate to predetermined fundamental frequencies of the valid boundary signal, to a magnitude threshold, wherein the identification of the candidate boundary signal as the valid boundary signal is based upon the comparison to the magnitude threshold.

5. The boundary signal detection system of claim **1**, wherein the converting of the candidate boundary signal from a time domain to a frequency domain comprises:

carrying out a fast Fourier transform of the candidate boundary signal;

computing the power spectrum of the fast Fourier transform; and

normalizing the fast Fourier transform power spectrum of the candidate boundary signal; and

wherein the comparing of the at least one embedded frequency in the candidate boundary signal to at least one predetermined embedded frequency of the valid boundary signal comprises:

identifying peaks in the normalized fast Fourier transform power spectrum of the candidate boundary signal proximate to predetermined fundamental frequencies of the valid boundary signal; and

comparing the identified peaks to a frequency location threshold and a magnitude threshold, wherein the identification of the candidate boundary signal as the valid

boundary signal is based upon the comparison of the identified peaks to the frequency location threshold and magnitude threshold.

6. The boundary signal detection system of claim **1** further comprising a boundary driving circuit to transmit the valid boundary signal indicating a boundary for the target region.

7. The boundary signal detection system of claim **1**, further comprising a boundary driving circuit to transmit a valid boundary signal indicating a boundary for the target region, wherein the boundary driving circuit transmits the valid boundary signal on a boundary wire.

8. The boundary signal detection system of claim **1** further comprising a boundary driving circuit to transmit the valid boundary signal indicating the boundary for the target region, wherein the valid boundary signal comprises a plurality of embedded frequencies, the plurality of embedded frequencies being whole multiples of one another.

9. The boundary signal detection system of claim **1** further comprising a vehicle having a propulsion unit and carrying a sensor to acquire the acquired candidate boundary signal, wherein the electronics are further to output control signals to the propulsion unit to direct movement of the vehicle, the control signals being based upon candidate boundary signals identified as the valid boundary signal.

10. The boundary signal detection system of claim **1** further comprising a vehicle having a propulsion unit and carrying a sensor to acquire the acquired candidate boundary signal, the electronics to further determine a position of the vehicle based upon candidate boundary signals identified as the valid boundary signal.

11. A robotic appliance comprising:

a propulsion unit to move the robotic appliance;

a boundary sensor carried by the robotic appliance, the boundary sensor comprising an inductor to receive a candidate boundary signal;

electronics carried by the robotic appliance to:

convert the candidate signal from a time domain to a frequency domain to identify at least one embedded frequency in the candidate boundary signal;

compare the at least one embedded frequency in the candidate boundary signal to at least one predetermined embedded frequency of a valid boundary signal; and

identify the candidate boundary signal as the valid boundary signal based upon the comparison; and

output control signals to the propulsion unit to direct movement of the robotic appliance, the control signals being based upon candidate boundary signals identified as the valid boundary signal.

12. The robotic appliance of claim **11**, wherein the converting of the candidate boundary signal from a time domain to a frequency domain comprises carrying out a Fourier transform of the candidate boundary signal.

13. The robotic appliance of claim **11**, wherein the converting of the candidate boundary signal from a time domain to a frequency domain comprises:

carrying out a fast Fourier transform of the candidate boundary signal;

compute the power spectrum of the fast Fourier transform; and

normalizing the fast Fourier transform power spectrum of the candidate boundary signal.

14. The robotic appliance of claim **11**, wherein the converting of the candidate boundary signal from a time domain to a frequency domain comprises:

carrying out a fast Fourier transform of the candidate boundary signal;

compute the power spectrum of the fast Fourier transform; and

normalizing the fast Fourier transform power spectrum of the candidate boundary signal; and

wherein the comparing of at least one embedded frequency in the candidate boundary signal to at least one predetermined embedded frequency of the valid boundary signal comprises:

comparing the normalized fast Fourier transform power spectrum of the candidate boundary signal, proximate predetermined fundamental frequencies of the valid boundary signal, to a magnitude threshold, wherein the identification of the candidate boundary signal as the valid boundary signal is based upon the comparison to the magnitude threshold.

15. The robotic appliance of claim **11**, wherein the converting of the candidate boundary signal from a time domain to a frequency domain comprises:

carrying out a fast Fourier transform of the candidate boundary signal;

compute the power spectrum of the fast Fourier transform; and

normalizing the fast Fourier transform power spectrum of the candidate boundary signal; and

wherein the comparing of the at least one embedded frequency in the candidate boundary signal to at least one predetermined embedded frequency of the valid boundary signal comprises:

identifying peaks in the normalized fast Fourier transform power spectrum of the candidate boundary signal proximate predetermined fundamental frequencies of the valid boundary signal; and

comparing the identified peaks to a frequency location threshold and a magnitude threshold, wherein the identification of the candidate boundary signal as the valid boundary signal is based upon the comparison of the identified peaks to the frequency location threshold and magnitude threshold.

16. A vehicle position detection system comprising:

a boundary driving circuit to transmit a valid boundary signal indicating a boundary for a target region;

a vehicle to move relative to the boundary for the target region, the vehicle comprising:

a boundary sensor carried by the vehicle, the boundary sensor comprising an inductor to receive a candidate boundary signal; and

electronics to:

determine whether the candidate boundary signal is the valid boundary signal for the target region or is an extraneous boundary signal for a neighboring region by:

converting the candidate boundary signal from a time domain to a frequency domain to identify at least one embedded frequency in the candidate boundary signal;

comparing the at least one embedded frequency in the candidate boundary signal to at least one predetermined embedded frequency of the valid boundary signal; and

identifying the candidate boundary signal as the valid boundary signal based upon the comparison; and

determine a position of the vehicle based upon candidate boundary signals identified as the valid boundary signal.

17. The vehicle position detection system of claim 16, wherein the valid boundary signal indicates an outer boundary for the target region.

18. The vehicle position detection system of claim 16, wherein the valid boundary signal indicates an inner boundary for the target region.

19. The vehicle position detection system of claim 16, wherein the boundary driving circuit transmits the valid boundary signal on a boundary wire.

* * * * *