US007932850B1

(12) **United States Patent**
Hochschild, III et al.

(10) **Patent No.: US 7,932,850 B1**
(45) **Date of Patent: Apr. 26, 2011**

(54) **BUOYANT TARGET WITH RADAR REFLECTIVITY**

(75) Inventors: **Arthur Anton Hochschild, III**, Garden Grove, CA (US); **Roman Horeczko**, Huntington Beach, CA (US); **Arthur Anton Hochschild, IV**, Tustin, CA (US)

(73) Assignee: **Arthur Anton Hochschild, III**, Garden Grove, CA (US)

(*) Notice: Subject to any disclaimer, the term of this patent is extended or adjusted under 35 U.S.C. 154(b) by 0 days.

(21) Appl. No.: **12/790,518**

(22) Filed: **May 28, 2010**

(51) **Int. Cl.**
H01Q 15/00 (2006.01)

(52) **U.S. Cl.** **342/8**; 342/5; 342/7; 342/9; 342/10

(58) **Field of Classification Search** 342/5, 7–10; 343/915

See application file for complete search history.

(56) **References Cited**

U.S. PATENT DOCUMENTS

2,534,716	A *	12/1950	Hudspeth et al.	.....	441/20
2,888,675	A *	5/1959	Pratt et al.	.....	342/8
3,224,001	A *	12/1965	Radnofsky et al.	.....	342/8
3,671,965	A *	6/1972	Rabenhorst et al.	.....	342/8
3,806,927	A *	4/1974	Lane, Jr.	.....	342/7
4,673,934	A *	6/1987	Gentry et al.	.....	342/8
4,733,236	A *	3/1988	Matosian	.....	342/7
4,901,081	A *	2/1990	Bain et al.	.....	342/8
4,980,688	A *	12/1990	Dozier, Jr.	.....	342/9
5,457,472	A *	10/1995	Bjordal et al.	.....	343/912
5,969,660	A *	10/1999	Veazey	.....	342/8
6,300,893	B1 *	10/2001	Schaff et al.	.....	342/10
6,384,764	B1 *	5/2002	Cumberland	.....	342/8
6,570,545	B1 *	5/2003	Snow et al.	.....	343/915
6,592,416	B1 *	7/2003	Hochschild, III	.....	441/20
6,784,825	B1 *	8/2004	Kubota et al.	.....	342/5

OTHER PUBLICATIONS

Anonymous, Documentation for Davis "Echomaster", Sep. 1, 2009 (3 sheets).

* cited by examiner

Primary Examiner — Thomas H Tarcza
Assistant Examiner — Peter Bythrow
(74) *Attorney, Agent, or Firm* — Squire, Sanders & Dempsey (US) LLP

(57) **ABSTRACT**

A buoyant target comprises an inflatable structure with a drogue chute attached to the periphery of the bottom of the inflatable structure. The drogue chute is an open flexible structure with a bottom end weighted with ballast to deploy it, and with ports through its side to permit water to flow into and out of it. A radar reflector device is attached inside the inflatable structure. The radar reflector device comprises a plurality of mutually orthogonal radar reflective surfaces having central reflection vectors pointed at predetermined directions.

19 Claims, 8 Drawing Sheets

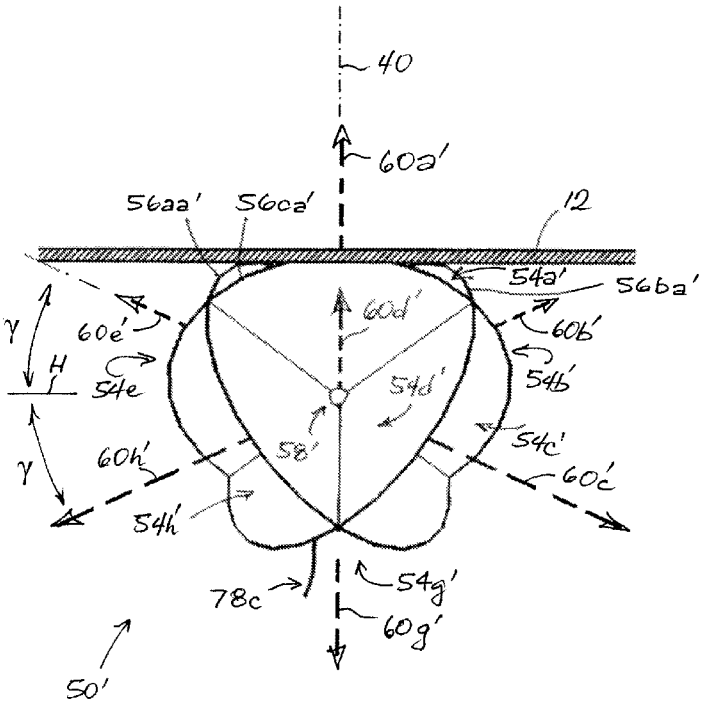

FIG. 1

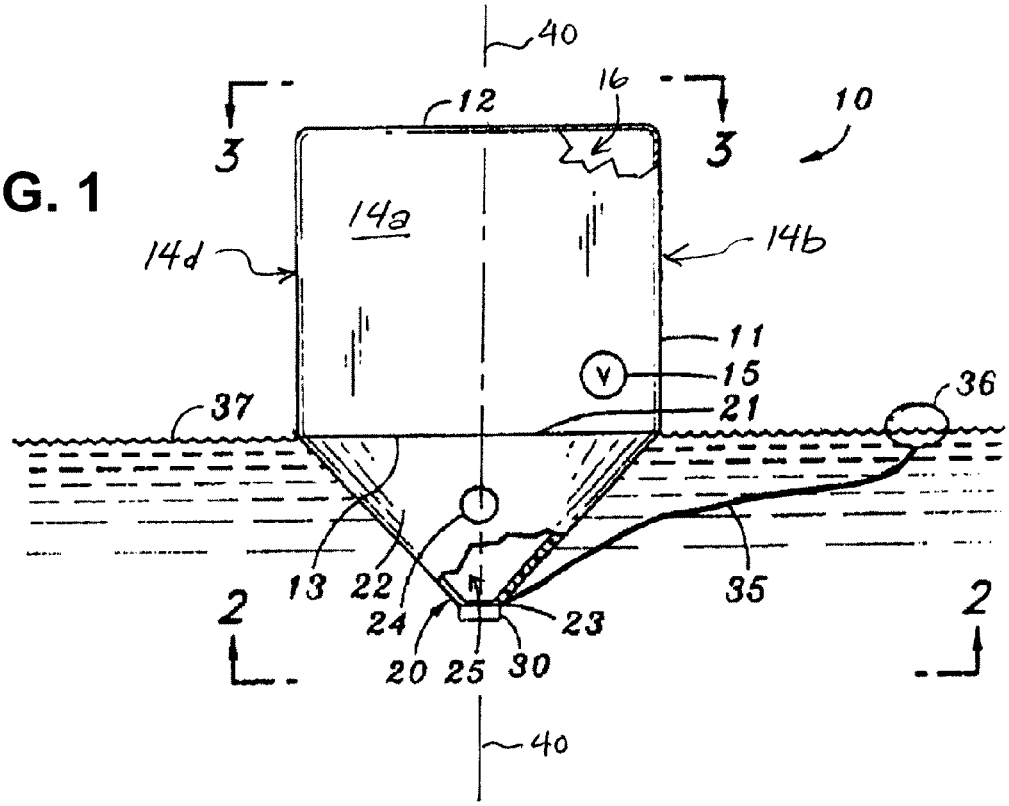

FIG. 2

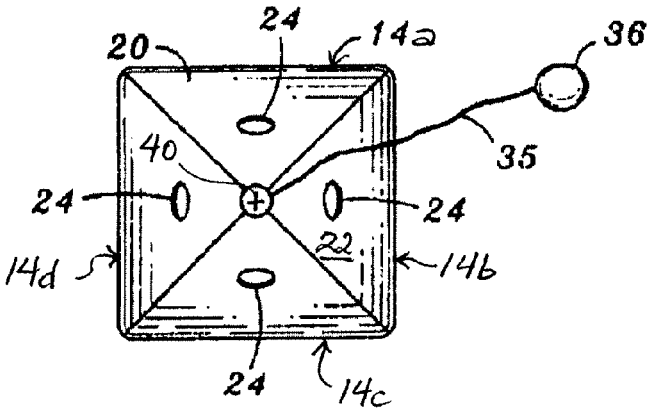

FIG. 3

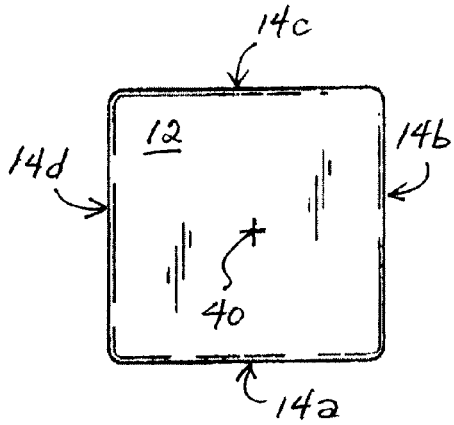

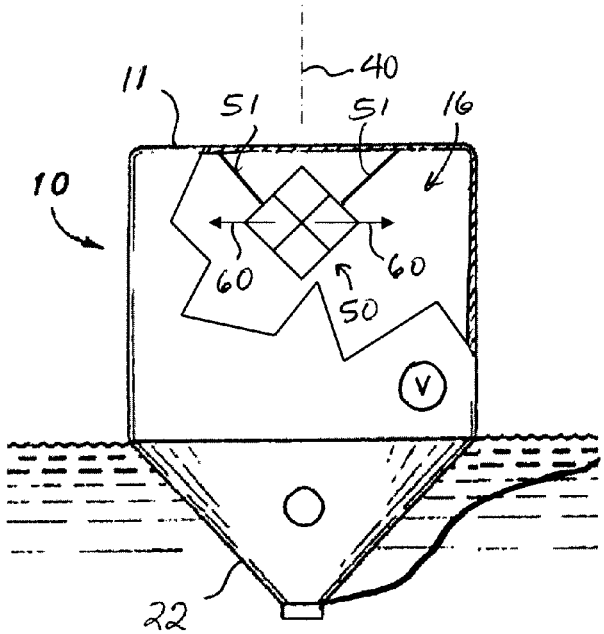
40
11
51
51
16
10
60
60
50
V
22

FIG. 4

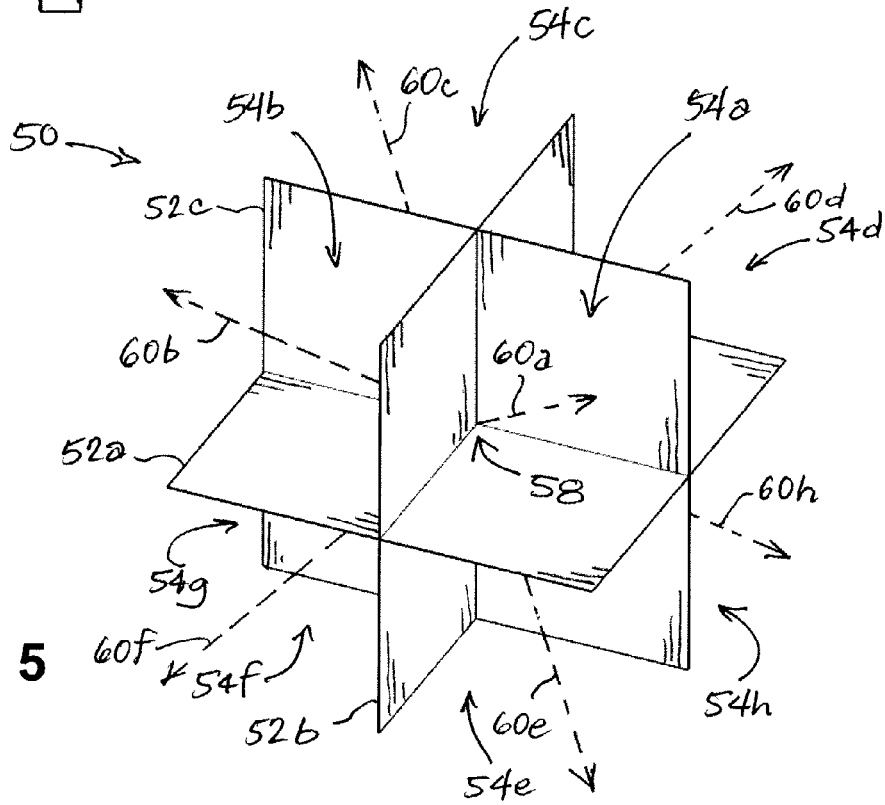
54c
60c
54b
54a
50
52c
60d
54d
60b
60a
52a
58
60h
54g
60f
54f
52b
60e
54h
54e

FIG. 5

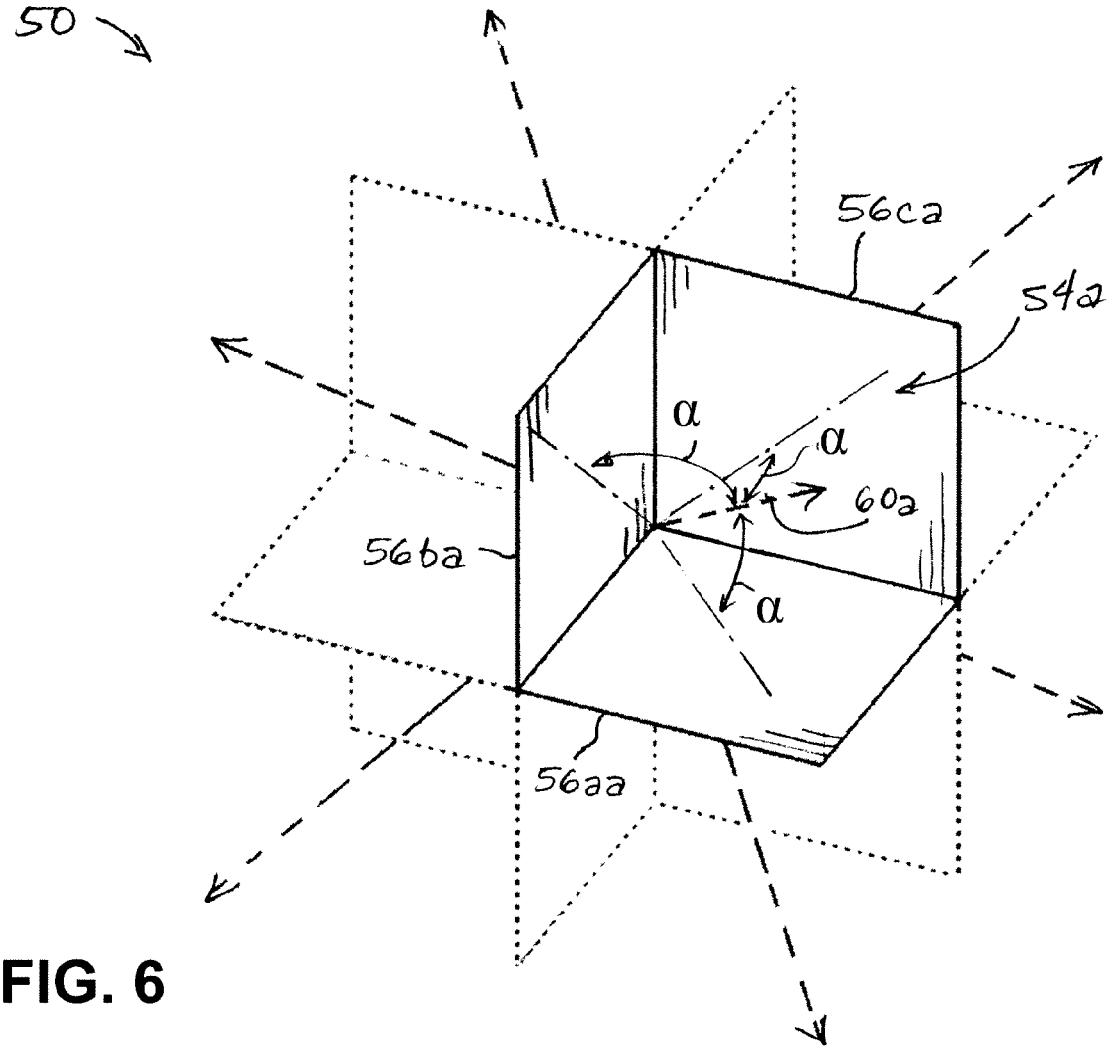

FIG. 6

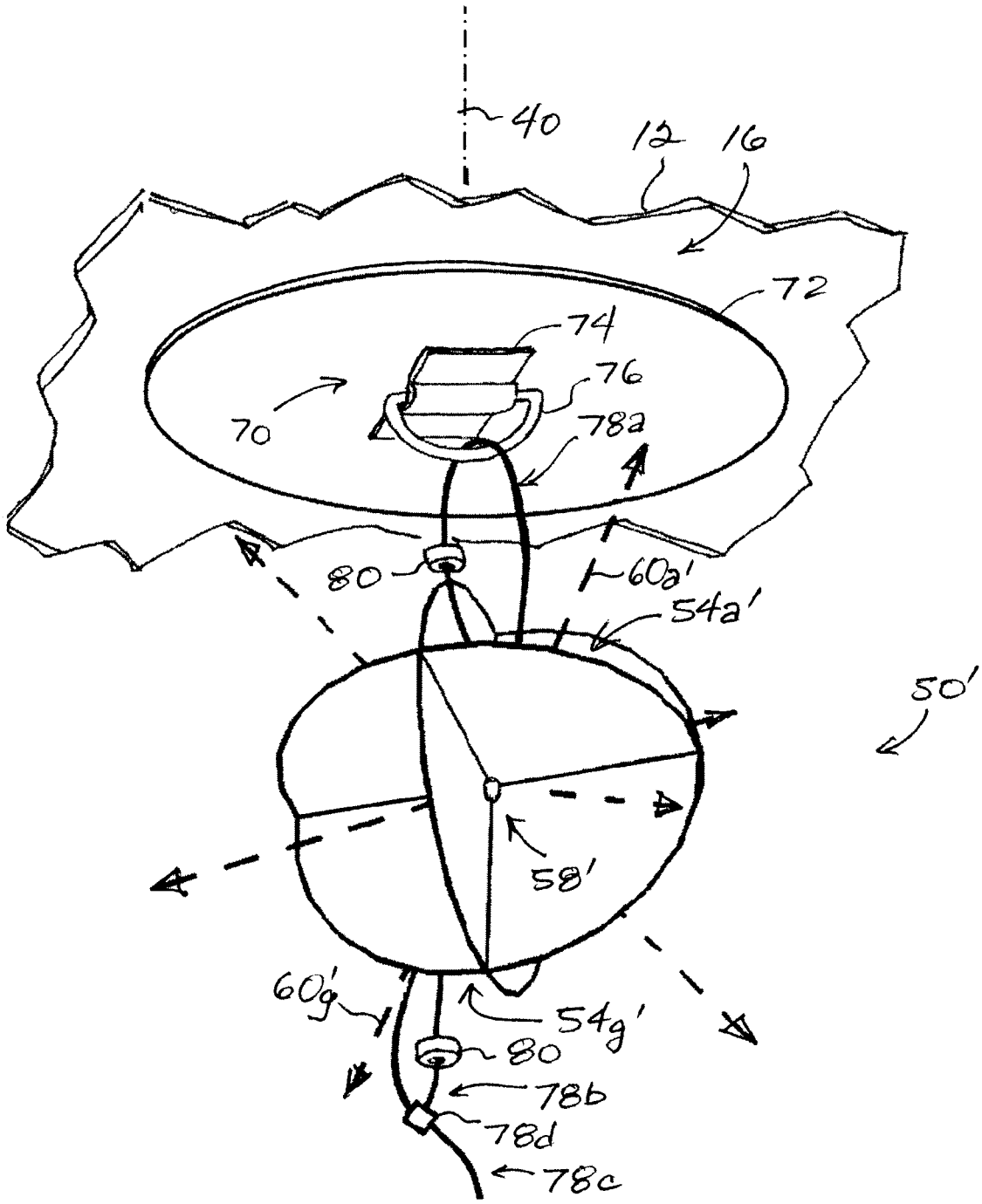

FIG. 7

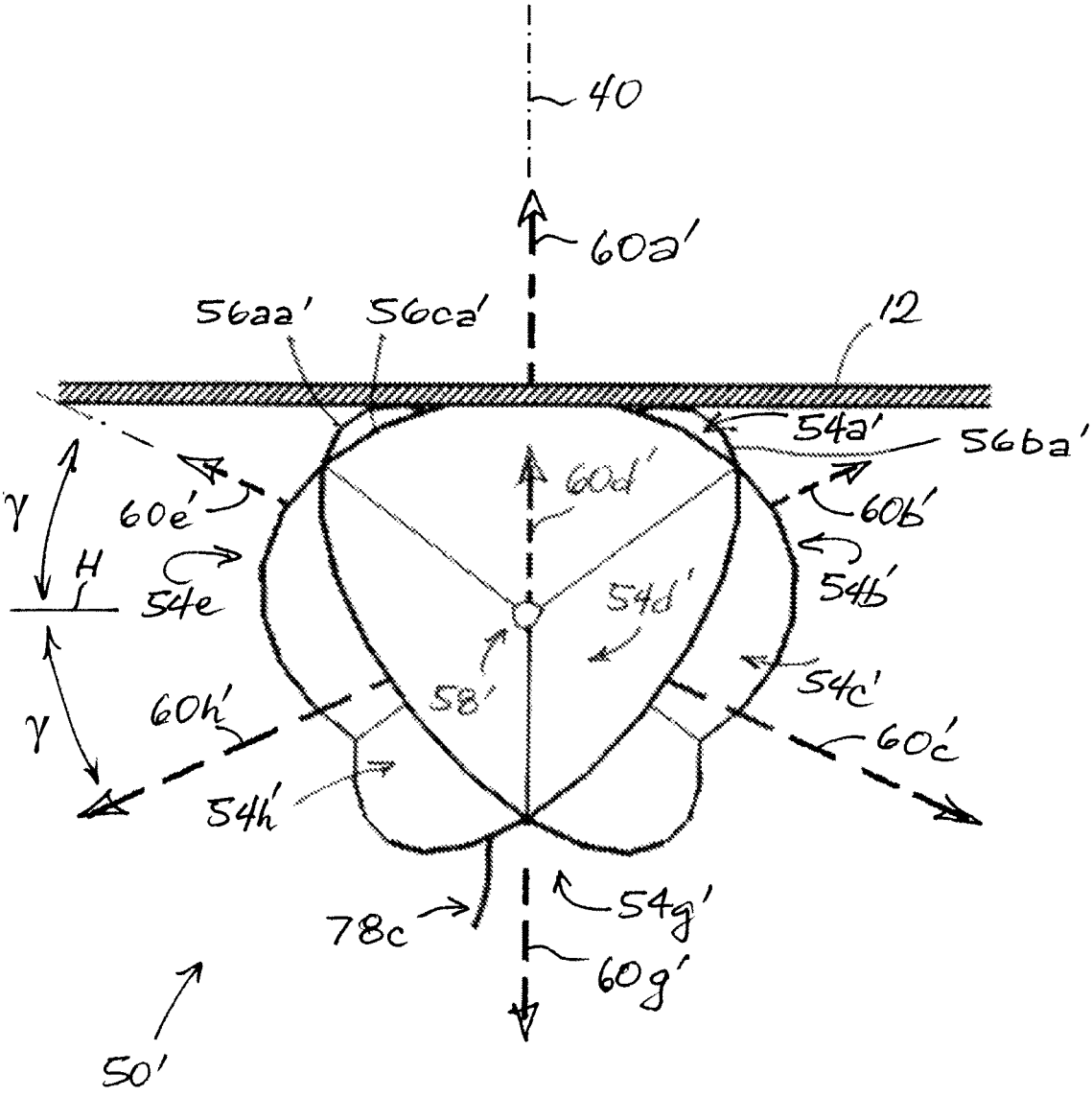
40
60a'
56aa'
56ca'
12
54a'
56ba'
60d'
60e'
60b'
γ
H
54e
54b'
54d'
58'
54c'
γ
60h'
60c'
54h'
78c
54g'
60g'
50'

FIG. 8

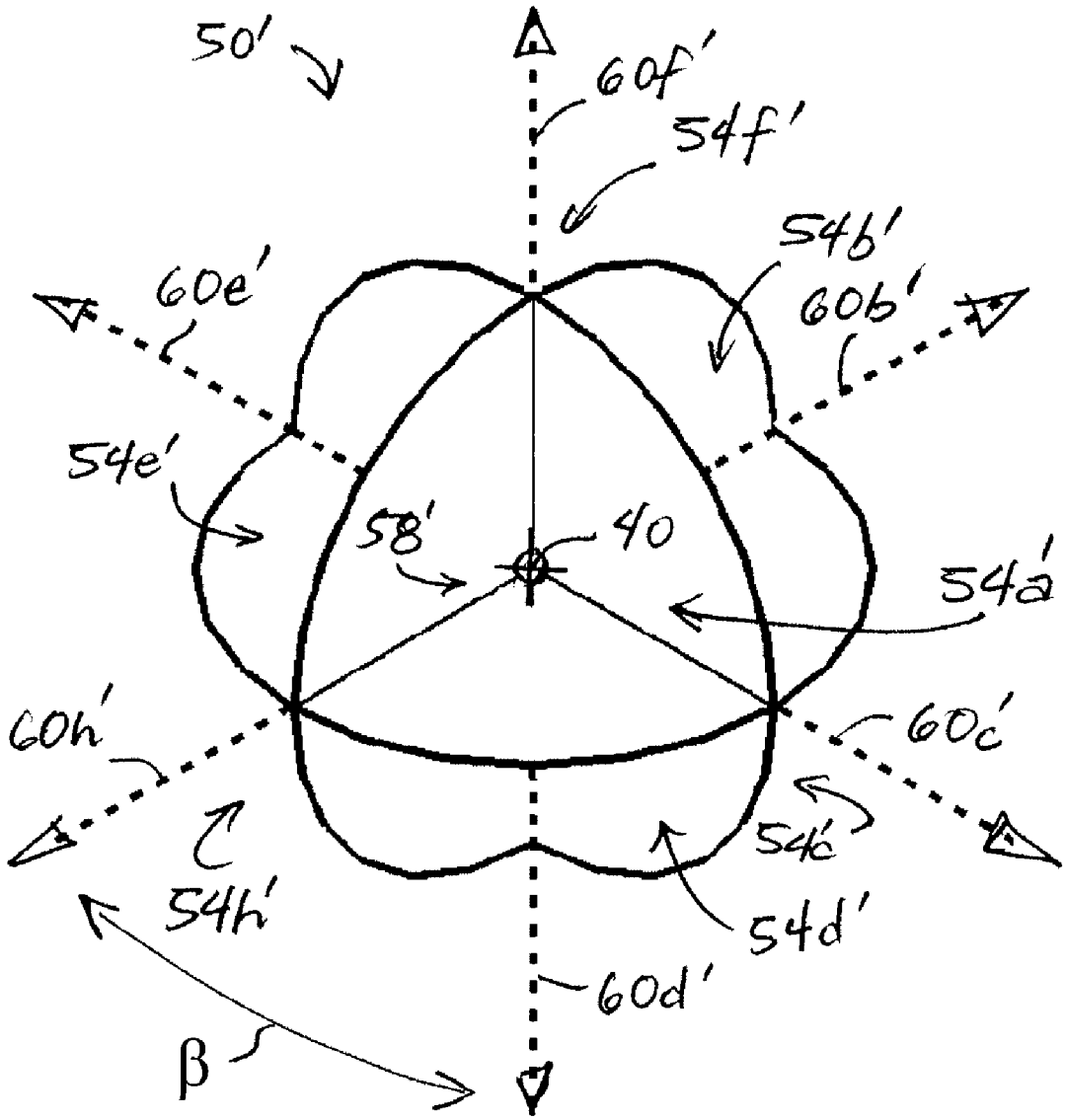

FIG. 9

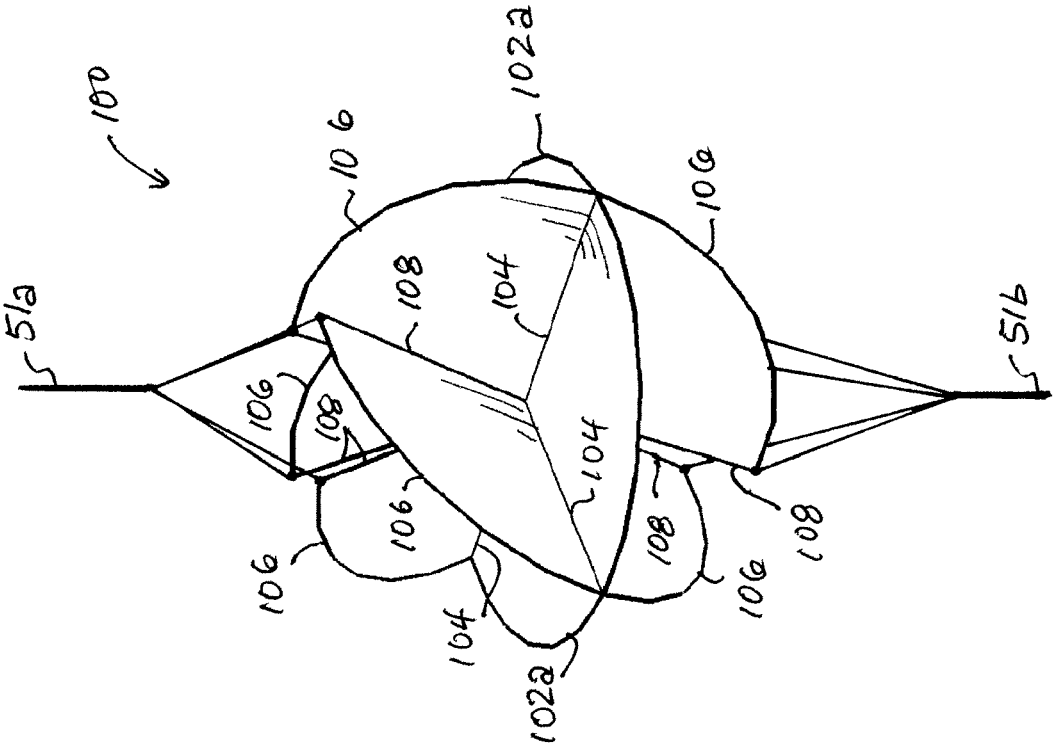
100
51a
106
108
104
102a
51b

FIG. 11

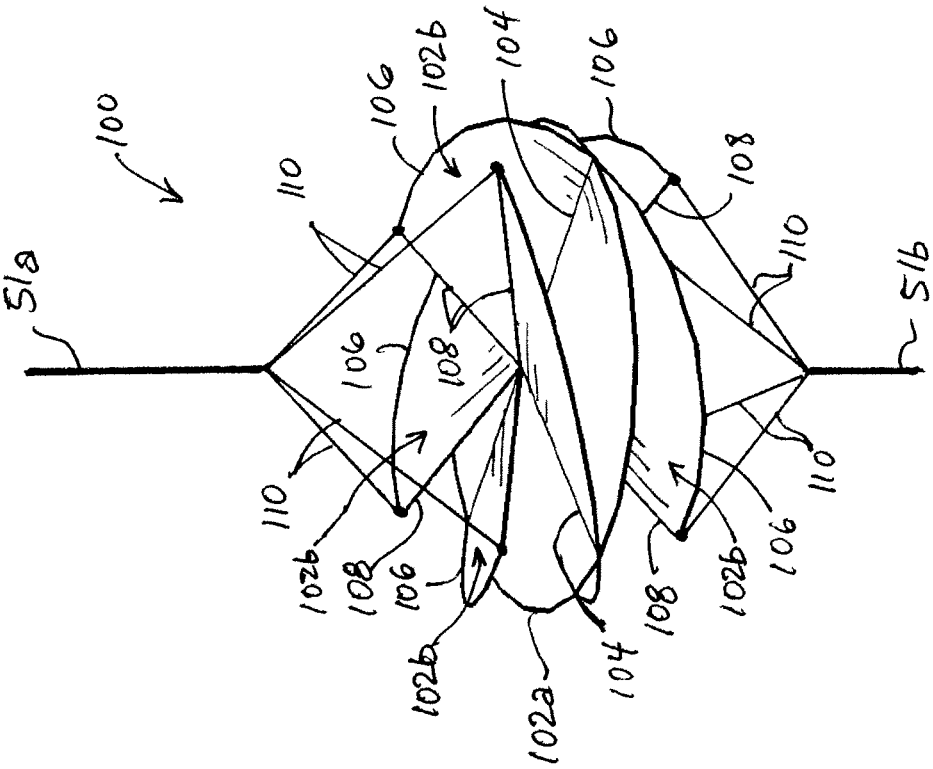
100
51a
110
106
102b
108
104
102a
51b

FIG. 10

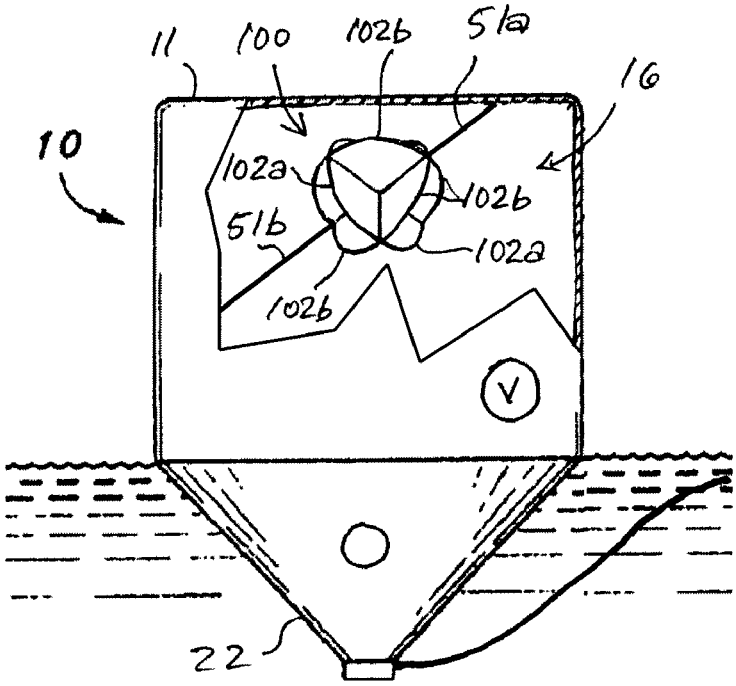
11
100
102b
51a
16
10
102a
102b
51b
102a
102b
V
22

FIG. 12

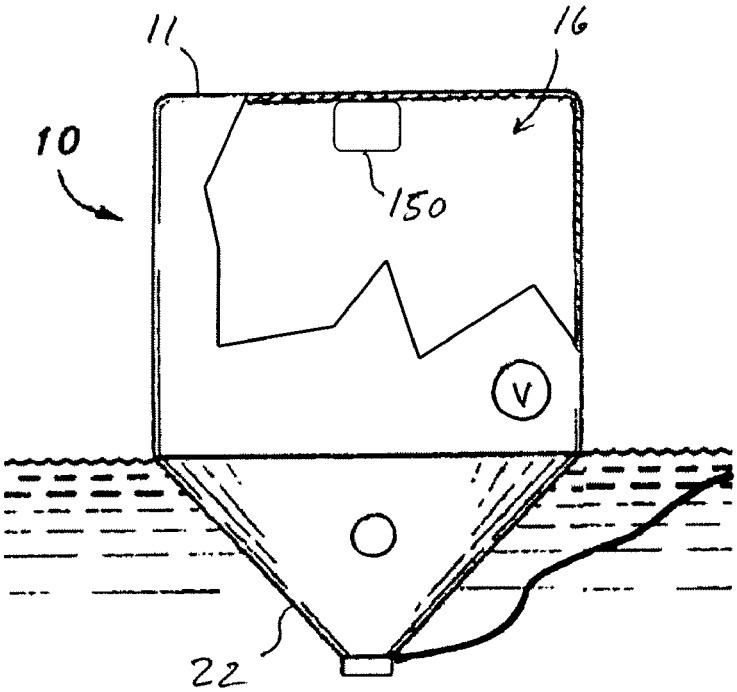
11
16
10
150
V
22

FIG. 13

BUOYANT TARGET WITH RADAR REFLECTIVITY

FIELD OF THE INVENTION

This invention relates generally to a target for gunfire training and, more particularly, to a buoyant, inflatable target with radar reflectivity. The invention is optionally used for "man overboard" training exercises.

BACKGROUND OF THE INVENTION

Naval battle exercises involve shipborne weapons and floating targets to be hit by gunfire. It is often desired that the targets simulate the size and/or movement of boats and other floating objects. A problem associated with such targets is that they must often be large in size, which makes providing a large number of "hard targets" impractical. To address this, it is common practice to provide buoyant, inflatable and collapsible structures for targets. Such targets can be folded to a relatively small size so that many can be stored and quickly inflated to full size on the water.

Buoyant and inflatable targets, however, are susceptible water currents and waves, and more particularly to the wind, also known as set and drift, which cause the targets to move in a manner that does not properly simulate movements of a true battle target. Anchors or drogue chutes are often added to the targets to prevent or inhibit excessive movement. Many conventional drogue chutes cannot be emptied to permit convenient target recovery. Proper sea anchors take time and experience to rig and launch, and the anchor line and commercial sea anchors cost money. Many times a makeshift sea anchor is improperly rigged using a weighted ammunition shell casing or ammunition box full of scrap metal. These types of sea anchors drop directly below the target balloon and exert too much resistance in heavy seas, resulting in damage to the target balloon before it can serve its intended purpose.

Increasingly, gunnery exercises involve the use of radar to sight in gunnery radar, thereby raising the need for an inflatable target with enhanced radar reflectivity. Prior attempts to increase radar reflectivity included mixing metal shavings with a viscous liquid, such as oil, and pouring the mixture inside the inflated target. A problem with this approach is that the metal shavings can provide insufficient reflectivity, especially when the shavings settle to the bottom of the target over time. Metallic sheet materials have also been attached on the exterior of an inflatable target to increase radar reflectivity. A problem with this approach is that the metallic material, due to its electrical conductive properties, could present an electrical hazard during deployment and/or retrieval of the target on the deck of a ship. Other approaches involving metal plates have the disadvantage of puncturing the inflatable target and making the target top heavy or unwieldy during deployment and retrieval of the target.

Accordingly, there is a continuing need for an inflatable floating target that closely simulates the movement of a body of substantial mass and stability so as to establish a more accurate test of a trainee's gunnery skills, maintains a generally upright orientation, and which has enhanced radar reflectivity.

Radar reflective targets are used to sight in and reconcile the accuracy of a ship's gunnery radar. Accuracy must be validated to insure that calibration is correct. To do this, one needs to fire weapons using the radar.

SUMMARY OF THE INVENTION

Briefly and in general terms, the present invention is directed to a buoyant target with radar reflectivity.

In aspects of the present invention, a target comprises an inflatable structure formed of a flexible material that allows the inflatable structure to expand from a collapsed state to an inflated state. The target further comprises a radar reflector device disposed inside the inflatable structure, the radar reflector device comprising a plurality of 3-surface orthogonal reflectors configured to reflect a radar signal.

In other aspects, a target comprises an inflatable structure configured to expand from a collapsed state to an inflated state when filled with gas. The target further comprises a radar reflector device disposed within the inflatable structure, the radar reflector device comprising three mutually orthogonal and intersecting planes, the planes configured to reflect a radar signal, the planes forming a plurality of orthogonal reflectors.

The features and advantages of the invention will be more readily understood from the following detailed description which should be read in conjunction with the accompanying drawings.

BRIEF DESCRIPTION OF THE DRAWINGS

FIG. **1** is a front elevation of a buoyant target in its deployed configuration, showing a partial cutaway view near the bottom and the top of the target, wherein the side and rear elevations are identical;

FIG. **2** is a bottom view taken at line **2-2** in FIG. **1**, showing four apertures for allowing water to fill a drogue chute attached to a bottom end of the buoyant target;

FIG. **3** is a top view taken at line **3-3** in FIG. **1**, showing a top panel connected above front, rear, left and right panels;

FIG. **4** is a front elevation view of the inflatable target of FIG. **1**, showing a partial cutaway revealing a radar reflector device attached by securement lines to interior surfaces of the buoyant target;

FIG. **5** is a perspective view of the radar reflector device of FIG. **4**, showing eight 3-surface orthogonal reflectors formed by three mutually orthogonal and intersecting planes;

FIG. **6** is a perspective view of the radar reflector device of FIG. **4**, showing three substantially planar surfaces, illustrated in solid line, of one of the eight 3-surface orthogonal reflectors;

FIG. **7** is a cutaway, perspective view of a top panel of a buoyant target, showing a means for attaching a spherical radar reflector device to the target, the radar reflector being loosely connected to an interior surface of the buoyant target;

FIG. **8** is an elevation view of the top panel and buoyant target of FIG. **7**, showing the means for attaching in a tightened state so that edges of the spherical radar reflector device are pulled into contact with the interior surface of the buoyant target;

FIG. **9** is a top view of the spherical radar reflector device of FIG. **8**, showing central reflection vectors, in plan view, spaced apart from each other at substantially equal angles;

FIG. **10** is a perspective view of a folding radar reflector device in a partially unfolded state, showing movable flat reflective leaves attached to a flat reflective base;

FIG. **11** is a perspective view of the folding radar reflector device of FIG. **10** in a further unfolded state, showing increased tension placed on securement lines attached to the reflective leaves;

FIG. **12** is a cutaway, elevation view of a buoyant target, showing the folding radar reflector device of FIGS. **10** and **11** with the reflective leaves and the reflective base forming three mutually orthogonal planes; and

FIG. **13** is an elevation view of a buoyant target, showing an electronic device configured to transmit signals.

DETAILED DESCRIPTION OF THE INVENTION

Referring now in more detail to the exemplary drawings for purposes of illustrating embodiments of the invention, wherein like reference numerals designate corresponding or like elements among the several views, there is shown in FIGS. **1-4** a buoyant target **10** made of a flexible membrane material so it can be collapsed and folded to a small bulk. Part of the buoyant target **10** can be inflated for deployment on water. The membrane material is impermeable to the inflating gas. Suitable materials include without limitation polyvinyl chloride and polyethylene sheeting, which are preferable because structural seams can be heat sealed, solvent sealed, or cemented as desired.

The buoyant target **10** has an inflatable structure **11** that comprises a top panel **12**, a bottom panel **13** and a sidewall **14** which enclose an air-filled chamber **16** upon deployment. The inflatable structure is substantially airtight. The sidewall **14** is rectangular and has a front panel **14***a*, a right panel **14***b*, a rear panel **14***c*, and a left panel **14***d*. Instead of being rectangular, the sidewall can be circular in other embodiments.

As shown in FIG. **1**, a valve **15** in one of the sidewall panels is provided to enable the inflatable structure **11** to be inflated or deflated as needed. A drogue chute **20** is attached to the bottom panel **13** of the inflatable structure **11**, which stabilizes the inflatable structure and prevents the it from tipping over of tilting excessively due to wave motion and wind. An upper edge **21** of the drogue chute preferably conforms to and is attached to the perimeter of the sidewall **14** and bottom panel **13**. The drogue chute **20** is a flexible structure formed from material identical to or similar to that of the inflatable structure to allow the drogue chute to be folded for storage, and unfolded when the buoyant target is deployed.

Still referring to FIG. **1**, the deployed drogue chute **20** is preferably tapered. The deployed drogue chute **20** comprises a tapered sidewall **22** that converges toward a lower end **23**. The lower end **23** is aligned with the central axis **40** of the inflatable structure **11**. The central axis **40** is located at substantially equal distances from the front panel **14***a*, the right panel **14***b*, the rear panel **14***c*, and the left panel **14***d* of the sidewall. The tapered sidewall **22** of the drogue chute **20** is pyramidal. Other tapered shapes for the sidewall **22** are possible, including without limitation a conical shape.

The tapered sidewall **22** and the bottom panel **13** of the inflatable structure **11** enclose a chamber **25** which fills with water upon deployment of the buoyant target **10**. A plurality of apertures or ports **24** are formed through the tapered sidewall **22** of the drogue chute **20**. The ports **24** are of sufficient diameter to permit some flow of water into and out of the chamber **25**, but small enough to leave a sufficient area of material of the tapered sidewall **22** to engage water within the drogue chute chamber **25**. The water within the drogue chute chamber **25** serves to stabilize the inflatable structure **11** above.

A weight **30** is fixed to the lower end **23** of the drogue chute **20**. When the inflatable structure **11** is inflated and placed on water, the weight **30** will pull the drogue chute down to the pyramid shape. The chute will fill with water quickly, will stabilize the buoyant target so it rests upright in the water, and will resist movement by the wind and water current.

The drogue chute **20** functions as an anchor against drift caused by wind on the inflatable structure **11** while simultaneously allowing water current to pass through and/or around the drogue chute. Unlike conventional sea anchors, which have a parachute-like structure submerged in the water and connected by a line to a buoyant target, the drogue chute **20** inhibits movement of the buoyant target due to water current and wind. Another problem with conventional sea anchors is that they can drop downwardly and become a deadweight on the buoyant target, which might submerge the buoyant target and/or make recovery of the buoyant target difficult.

To facilitate recovery of the buoyant target **10**, a flexible, nylon rope or tow line **35** is optionally attached to the lower end **23** of the drogue chute **20** to allow a person to pull the lower end upward, tilting the buoyant target, and spilling the water that was in the drogue chute chamber **25** when the buoyant target is to be removed from the water. The inflatable structure **11** can then be deflated by opening the valve **15**, and the fully collapsed target can readily be pulled aboard a ship. An optional float **36** is attached to the other end of the tow line **35**. The float **36** keeps the other end of the tow line **35** near the water surface **37** to allow ready access to the tow line to start the process of recovering the buoyant target.

In some embodiments, the inflatable structure **11** is a 10-foot cube, the drogue chute **20** is a 3-foot high inverted pyramid extending upward from the lower end **23** to the bottom panel **13** of the inflatable structure **11**, and the water flow-through ports **24** are about 6 inches in diameter and located on all four sides of the drogue chute pyramid. It will be appreciated that other dimensions may be implemented as desired to simulate a variety of battle targets.

As shown in FIG. **4**, a radar reflector device **50** is secured within the air-filled chamber **16** of the inflatable structure **11**. The radar reflector device is secured with a plurality securement lines **51**, which can be a rope, cable, or other flexible cord. The other ends of the securement lines are fixed to the interior surfaces of the inflatable structure **11**. When the inflatable structure **11** is fully inflated with gas, as shown in FIG. **4**, the securement lines are taught and align the radar reflector device with the central axis **40** of the inflatable structure **11**.

As shown in FIG. **5**, the radar reflector device **50** comprises three mutually orthogonal sheets **52** of reflective material. As used herein, the phrase "mutually orthogonal" means that the referenced structures are substantially perpendicular to each other. It is to be understood that a condition modified by the word "substantially" or "substantial" is present in absolute or perfect form, as well as not necessarily absolute or perfect form but would be considered close enough to those of ordinary skill in the art to warrant designating the condition as still being present.

The sheets **52** of reflective material are substantially planar. One of the sheets **52***a* is illustrated horizontal and the other two sheets **52***b*, **52***c* are illustrated as vertical. The sheets **52** can have other orientations to facilitate reflection of a radar signal or other electromagnetic radiation transmitted from a particular direction relative to the buoyant target **10**. The sheets can be rigid, radar-reflective metal plates, or plates of non-reflective material such as a plastic material or corrugated cardboard.

Each of the sheets **52** are squares, which give the radar reflector device **50** a cubic outline, though it will be appreciated that the sheets **52** can have other shapes. The cubic radar reflector device **50** comprises a total of eight groups **54***a*-**54***f* of reflective surfaces **56**. Each of the eight groups **54***a*-**54***f* is a quadrant that comprises three radar reflective surfaces **56** that face each other and are mutually orthogonal, so as to form what is referred to herein as a 3-surface orthogonal reflector. The individual reflective surfaces **56** can be a metallic foil, metallic paint, or other radar reflective material that is laminated on, coated on, bonded on, imbedded in, or covered on

the sheets **52**. Mylar (R) can be used as a foil material. Optionally, the radar reflective surfaces **56** can be covered by a fabric or layer of soft material to prevent the radar reflector device **50** from cutting, puncturing, or otherwise damaging the inflatable structure **11**

As used herein, the phrase "3-surface orthogonal reflector" is defined as three radar reflective surfaces that face each other and are mutually orthogonal. For each group **54***a*-**54***f*, the three surfaces **56** are mutually orthogonal in that each surface is substantially perpendicular to the other two surfaces of the group. For clarity, a first of the 3-surface orthogonal reflectors **54***a* is illustrated in solid line and the other 3-surface orthogonal reflectors are illustrated in broken line in FIG. **6**. In each 3-surface orthogonal reflector, the three mutually orthogonal surfaces **56** converge or intersect at a common central point **58**.

As shown in FIG. **5**, each of the 3-surface orthogonal reflectors **54***a*-**54***h* has a central reflection vector **60***a*-**60***h*. As used herein, the "central reflection vector" is defined as a straight line pointing in a particular direction. Each central reflection vector originates from the central point **58** of the respective 3-surface orthogonal reflector. The center points of the eight 3-surface orthogonal reflectors are mutually coincident or coincide at the overall center of the radar reflector **50**. Thus, the central reflection vectors **60***a*-**60***h* point radially outward at different directions from the center of the radar reflector device **50**.

The following description in connection with FIG. **6** for the central reflection vector **60***a* of the first 3-surface orthogonal reflector **54***a* also applies to the respective central reflection vectors of the other seven 3-surface orthogonal reflectors of the radar reflector device **50**.

FIG. **6** shows the three mutually orthogonal surfaces **56***aa*, **56***ba*, **56***ca* of one of the 3-surface orthogonal reflectors **54***a*. The first planar surface **56***aa* is substantially perpendicular to the other two planar surfaces **56***ba*, **56***ca*. The central reflection vector **60***a* is oriented at substantially equal angles α relative to each of the three mutually orthogonal surfaces **56***aa*, **56***ba*, **56***ca*. That is, the central reflection vector **60***a* is oriented at or about forty-five degrees from the first planar surface **56***aa*, at or about forty-five degrees from the second planar surface **56***ba*, and at or about forty-five degrees from the third planar surface **56***bc*.

In some embodiments, some of the central reflection vectors **60** of the radar reflector device **50** are substantially horizontal when the inflatable target **10** is fully inflated and deployed, as shown in FIG. **5**. Having at least some of the central reflection vectors **60** substantially horizontal allows for better reflection of electromagnetic radiation originating from ships on the water as compared to having none of the central reflection vectors **60** substantially horizontal.

FIG. **7** shows another radar reflector device **50'** for use in the inflatable target **10**. The radar reflector device **50'** comprises three mutually orthogonal sheets **52'** of reflective material. The sheets **50'** are substantially planar. The radar reflector device **50'** has a spherical outline because the sheets **52'** are circles. Suitable materials and construction of the sheets **52'** can be the same as previously described above in connection with FIG. **5**. The spherical radar reflector device **50'** comprises a total of eight groups **54***a*'-**54***f*' of reflective surfaces **56'**. Each group comprises three mutually orthogonal surfaces that face each other so as to form a 3-surface orthogonal reflector. In each 3-surface orthogonal reflector, the three mutually orthogonal surfaces **56'** converge or meet at a common central point **58**.'

The spherical radar reflector device **50'** is attached to the inner surface of the top panel **12** of the inflatable structure **11** and is disposed inside the air-filled chamber **16** when the buoyant target **10** is deployed for use. The area of attachment **70** is centered on the central axis **40** of the inflatable structure **11**. There is a circular piece of reinforcement material **72** at the area of attachment **70**. The reinforcement material **72** is bonded, welded or adhered to the inner surface of the top panel **12**. Opposite ends of a strap **74** are bonded, welded or adhered to the bottom surface of the reinforcement material **72**. The strap **74** attaches a D-ring **76** to the inflatable structure **11**. A middle segment of the strap **74** forms a loop under the reinforcement material **72** and carries the D-ring.

An adjustable, flexible loop **78**, such as thin rope, cord, or plastic wire tie, is strung through a hole at the center of the spherical radar reflector device **50'** and through the D-ring **76**. The flexible loop **78** is fed through the center hole of the radar reflector device in such a way that a loop segment **78***a*, which is looped around the D-ring **76**, extends out from a first 3-surface orthogonal reflector **54***a*', and the free ends **78***b*, **78***c* extend out from another 3-surface orthogonal reflector **54***g*'. A one-way device **78***d* at one end **78***b* allows the other end **78***c* to move in only one direction, downward. Examples for the one-way device **78***d* include without limitation a slip knot that engages the other end **78***c* or a flexible ratchet device that engages rigid bumps arranged in series on the other end **78***c*. When the other end **78***c* is pulled through the one-way device **78***d*, the size of the flexible loop is reduced which moves the spherical radar reflector device **50'** upward to the D-ring **76**. The flexible loop **78** passes through the central holes of a pair of washers **80** made of rubber or elastomeric material. One washer is above and the other is below the radar reflector device **50'**. The washers **80** prevent the flexible loop **78** from inadvertently pulling out of engagement with the radar reflector device **50'**.

In some embodiments, as shown in FIG. **8**, the flexible loop **78** is tightened so that the first orthogonal reflector **54***a*' is covered by the top panel **12** of the inflatable structure **11**. The top panel **12** abuts the edges of each of the three mutually orthogonal surfaces **56***aa*', **56***ba*', **56***ca*' of the first orthogonal reflector **54***a*'. The risk of damage to the top panel **12** is minimized because the edges of the orthogonal surfaces are rounded with no sharp corners, unlike the cubic radar reflector device **50**. Also, since the three mutually orthogonal surfaces **56***aa*', **56***ba*', **56***ca*' are substantially the same size and shape, the central reflection vector **60***a*' of the first orthogonal reflector is substantially vertical and pointed upward and is substantially coincident with the central axis **40** of the inflatable structure **11**. This ensures that the six surrounding 3-surface orthogonal reflectors **54***b*', **54***c*', **54***d*', **54***e*', **54***f* ', **54***h*' have central reflection vectors **60***b*', **60***c*', **60***d*', **60***e*', **60***f* ', **60***h*' that radiate outward toward potential radar transmitters and receivers so as to improve radar reflectivity of the buoyant target.

FIG. **9** shows a plan view, i.e., top view, of the spherical radar reflector device **50'** of FIG. **8** which has been tightly secured so as to abut the top, interior surface of the inflatable structure **11**. In FIG. **9**, the top panel **12**, the flexible loop **78**, and washers **80** are not shown for the sake of clarity. Six of the central reflection vectors **60***b*', **60***c*', **60***d*', **60***h*', **60***e*', **60***f* point outward from the center **58'** of the radar reflector device **50'**. In plan view, as shown in FIG. **9**, the six central reflection vectors **60***b*', **60***c*', **60***d*', **60***h*', **60***e*', **60***f*' are separated from each other by substantially equal angles β of about sixty degrees. The remaining two central reflection vectors **60***a*', **60***g*' are oriented vertically and aligned with the central axis **40** of the inflatable structure **11**. In other embodiments, the angles β range from about fifty degrees to about seventy degrees.

In elevation view, as shown in FIG. **8**, the non-vertical reflection vectors **60***b*', **60***c*', **60***d*', **60***h*', **60***e*', **60***f* are tilted from a horizontal plane H at substantially equal angles γ of about 20 degrees. Three of the six non-vertical reflection vectors **60***b*', **60***d*', **60***e*' are tilted above the horizontal plane H. The other three non-vertical reflection vectors **60***c*', **60***f*, **60***h*' are tilted below the horizontal plane H. In some embodiments, the angles γ range from about ten degrees to about thirty degrees, and more narrowly about fifteen degrees to about twenty-five degrees. Although none of the central reflection vectors **60***b*', **60***c*', **60***d*', **60***h*', **60***e*', **60***f* are substantially horizontal, Applicant has found that this configuration of central reflection vectors—tilted from horizontal from about twenty to thirty degrees, and more preferably about 20 degrees—provides outstanding radar reflection even when the buoyant target **10** is bobbing and tilting side to side on the water.

In some embodiments, the means and method for attachment shown in FIG. **7** and described in connection with FIG. **8** are duplicated on multiple interior surfaces of the sidewall **14** of the inflatable structure **11**, and a corresponding number of radar reflector devices are secured thereto to provide additional radar reflectivity to the buoyant target **10**. For example, two or more of the radar reflector devices **50'** can be attached to the top panel **12** within the inflatable chamber **16** of the inflatable structure **11**. In another non-limiting example, radar reflector devices can be secured in contact with interior surfaces of the front, rear, right and left panels **14***a*, **14***b*, **14***c*, **14***d* of the sidewall.

In some embodiments, the means and method for attachment shown in FIG. **7** and described in connection with FIG. **8** are duplicated on multiple exterior surfaces of the sidewall **14** and/or the top panel **12**. For example, radar reflector devices can be detachably secured in contact with exterior surfaces of one or any combination of the top panel **12** and the front, rear, right and left panels **14***a*, **14***b*, **14***c*, **14***d* of the sidewall.

FIGS. **10-12** show a folding radar reflector device **100** having reflective surfaces **102** configured to move relative to each other. The radar reflector device comprises a reflective base **102***a*, which is illustrated as horizontal in FIGS. **10** and **11**, and eight reflective leaves **102***b* that attached to the reflective base **102***a*. Both sides of the base **102***a* and each leaf **102***b* are radar reflective.

Each reflective leaf **102***b* has a fixed edge **104** that is hingedly connected to the reflective base. The fixed edges **104** are substantially straight to allow the reflective leaf to easily pivot between a face-down orientation, substantially parallel to the reflective base, and an upright orientation, substantially perpendicular to the plate. There are four reflective leaves **102***b* on one side of the reflective base, and another four reflective leaves on the other side of the reflective base. For each group of four reflective leaves, the fixed edges are substantially perpendicular to each other so as to form a cross pattern on the reflective base.

Each reflective leaf **102***b* has an outer edge **106** and an inner edge **108**, both of which are free to move relative to the reflective base. The inner edge **108** connects the outer edge **106** to the fixed edge **104**. A cord **110** is attached to each reflective leaf at or near where the outer and inner edges meet. The individual cords for the four reflective leaves above the reflective base meet at the end of a first securement line **51***a*. The individual cords for the four reflective leaves above the reflective base meet at the end of a second securement line **51***b*. With no tension placed on the securement lines **51***a*, **51***b*, the reflective leaves **102***b* are free to collapsed to the face-down orientation onto the reflective base **102***a*. Tension on the securement lines **51***a*, **51***b* is produced by pulling the two securement lines apart and away from the radar reflector device **100**. FIGS. **10** and **11** show the reflective leaves **102***b* pivoting relative to each other, and relative to the base **102***a*, as a result of different amounts of tension in the securement lines **51***a*, **51***b*, with FIG. **10** having less tension than in FIG. **11**.

As tension is increased beyond that of FIG. **11**, the reflective leaves **102***b* reach their fully upright orientation shown in FIG. **12** in which they are substantially perpendicular to the reflective base **102***a*. With all the reflective leaves **102***b* in their fully upright orientation, the folding radar reflector device **100** has the same structural configuration as the radar reflector device **50'** of FIGS. **7-9**. It will be appreciated that the reflective leaves **102***b* are capable of moving independently of each other and that tension on the securement lines **51***a*, **51***b* causes the reflective leaves **102***b* to move simultaneously to their upright orientations.

As shown in FIG. **12**, the folding radar reflector device **100** can be mounted within the air-filled chamber **16** of the inflatable structure **11** of the buoyant target **10**. The securement lines **51***a*, **52***b* are secured to inner surfaces of the inflatable structure **11** so that inflation of the inflatable structure **11** increases tension on the securement lines. The means and method of attachment can be the same as that described in connection with FIG. **7**.

The securement lines **51***a*, **52***b* can be sized so that when the inflatable structure **11** is fully inflated, the reflective leaves **102***b* are at their fully upright orientation relative to the reflective base **102***a*. In FIG. **12**, the reflective base **102***a* is not horizontal. The ends of the securement lines **51***a*, **51***b* are attached to predetermined positions on the inflatable structure **11** so that when the inflatable structure is fully inflated, the radar reflector device **100** and its central reflection vectors have the same orientation as described in connection with FIGS. **8** and **9**. It should also be apparent from FIG. **12** that the securement lines **51***a*, **51***b* maintain the orientation of the radar reflector device **100** while the inflatable structure **100** remains filled with gas.

Any number of the reflective leaves **102***b* and the reflective base **102***a* can have the same construction as that described above for the orthogonal sheets **52**, **52'** and the reflective surfaces **56**, **56'** in connection with FIGS. **4-9**. In further embodiments, the reflective base **102***a* and leaves **102***b* are constructed of a light-weight corrugated plastic or cardboard that is laminated on both sides with metal foil, then covered with a protective material, such as flexible fabric. The protective material near the fixed edges of the reflective leaves **102***b* are attached, such as by stitching or bonding, onto the base plate **102***a* or onto protective material covering the base plate **102***a*. The stitching or bonding forms a flexible seam, which functions as a hinge device about which the reflective leaves **102***a* may pivot between face-down and upright positions.

In some embodiments, the reflective base **102***a* and leaves **102***b* are constructed of a flexible material, such as the membrane material used for the sidewall **14**, top panel **12**, or bottom panel **13**. A metallic foil can then be laminated or bonded onto the membrane material of the leaves and base. Changes in the amount of tension in the securement lines **51***a*, **51***b* causes all the flexible, reflective base **102***a* and leaves **102***b* to bend or flex relative to each other. When the inflatable structure **11** is fully inflated, tension in the securement lines **51***a*, **51***b* is at a level that causes all the flexible, reflective leaves **102***b* to unfurl and stretch out so that they become substantially planar and form eight 3-surface orthogonal reflectors such as shown for the reflector devices of FIG. **5-9**.

It is to be understood that radar reflector devices described above are passive devices in the sense that they do not generate and/or transmit an electromagnetic signal. The radar reflector devices **50**, **50'**, **100** require no power source, which enables the buoyant target **10** to operate indefinitely. The radar reflector devices **50**, **50'**, **100** are configured to reflect non-visible electromagnetic radiation, such as a radar signal. The radar reflector devices **50**, **50'**, **100** are configured to reflect radar signals having frequencies, known in the art, used for aircraft and maritime navigation and for gunnery exercises.

In FIG. **13**, an electronic device **150** is attached to the interior surface of the top panel **12** and is disposed within the chamber **16** of the inflatable structure **11**. The electronic device **150** is an active device that comprises a power source and electronic circuitry. Instead of reflecting an electromagnetic signal, the electronic device **150** is configured to transmit an electromagnetic signal. The electronic device **150** can be remotely controlled to selectively transmit the electromagnetic signal at a desired time. The electromagnetic signal can be transmitted by the electronic device **150** continuously and/or periodically. The electronic device **150** can be configured to monitor and receive a radar signal from an aircraft or a ship, and transmit an electromagnetic signal in response to the received signal. The transmitted electromagnetic signal can be at a frequency selected based on the received signal.

In some embodiments, the buoyant target includes no drogue chute and no tow line. No anchor device or a different type of anchor device may be attached to the inflatable structure of the buoyant target, as desired. Instead of a drogue chute, another stabilizing device can be attached to the bottom end of the inflatable structure to prevent the buoyant target from tipping over of tilting excessively due to wave motion and wind.

While several particular forms of the invention have been illustrated and described, it will also be apparent that various modifications can be made without departing from the scope of the invention. It is also contemplated that various combinations or subcombinations of the specific features and aspects of the disclosed embodiments can be combined with or substituted for one another in order to form varying modes of the invention. Accordingly, it is not intended that the invention be limited, except as by the appended claims.

What is claimed is:

1. A buoyant target comprising:

an inflatable structure formed of a flexible material that allows the inflatable structure to expand from a collapsed state to an inflated state;

a radar reflector device disposed inside the inflatable structure, the radar reflector device comprising a plurality of 3-surface orthogonal reflectors configured to reflect a radar signal, each of the 3-surface orthogonal reflectors has a central reflection vector oriented at substantially equal angles from each radar reflective surface of the 3-surface orthogonal reflector; and

a stabilizing structure configured to orient the inflatable structure on a water surface such that six central reflection vectors are tilted from horizontal at substantially equal angles of at least 10 degrees.

2. The buoyant target of claim **1**, wherein the radar reflector device comprises three flat sheets that are substantially perpendicular to each other, and the three flat sheets form the plurality of 3-surface orthogonal reflectors.

3. The buoyant target of claim **1**, wherein the six central reflection vectors point radially outward, in plan view, from the inflatable structure.

4. The buoyant target of claim **1**, wherein the six central reflection vectors are spaced apart from each other, in plan view, at substantially equal angles.

5. The buoyant target of claim **1**, wherein the six central reflection vectors are spaced apart from each other, in plan view, at angles from about 50 degrees to about 70 degrees.

6. The buoyant target of claim **1**, wherein the stabilizing structure is configured to orient the inflatable structure on the water surface such that each of the six central reflection vectors are tilted from horizontal by about 20 degrees.

7. The buoyant target of claim **1**, wherein the radar reflector device comprises at least six 3-surface orthogonal reflectors, each of the 3-surface orthogonal reflectors having three radar reflective surface that are substantially perpendicular to each other and intersect an a center point, and the center points of the at least six 3-surface orthogonal reflectors are mutually coincident.

8. The buoyant target of claim **7**, wherein at least three edges of the radar reflector device abuts an interior surface of the inflatable structure, the interior surface being substantially horizontal when the inflatable structure is fully inflated and deployed on water.

9. The buoyant target of claim **1**, wherein the radar reflector device comprises a plurality of reflective leaves formed of rigid material, the reflective leaves connected to each other by hinges, the reflective leaves configured to pivot or bend relative to each other at the hinges.

10. The buoyant target of claim **9**, wherein a first plurality of the reflective leaves are configured to pivot or bend relative to each other at the hinges when the inflatable structure is inflated, and wherein when the inflatable structure is fully inflated the reflective leaves are substantially perpendicular to each other.

11. The buoyant target of claim **9**, wherein a first plurality of the leaves are attached to an end of a first securement line, another end of the first securement line is attached to the inflatable structure, a second plurality of leaves are attached to an end of a second securement line, and another end of the second securement line is attached to the inflatable structure.

12. The buoyant target of claim **1**, wherein the stabilizing structure is connected to a bottom end of the inflatable structure, the stabilizing structure including a sheet of flexible material enclosing a chamber and the sheet including an aperture that allows water to fill the chamber when placed on water.

13. A buoyant target comprising:

an inflatable structure configured to expand from a collapsed state to an inflated state when filled with gas; and

a radar reflector device disposed within the inflatable structure, the radar reflector device comprising three mutually orthogonal and intersecting planes, the planes configured to reflect a radar signal, the planes forming a plurality of orthogonal reflectors, wherein each plane is bounded by an edge that forms a circle, and the edge of each plane abuts an interior surface of the inflatable structure, the interior surface being substantially flat when the inflatable structure is in the inflated state.

14. The buoyant target of claim **13**, further comprising a stabilizing structure connected to a bottom end of the inflatable structure, the stabilizing structure enclosing a chamber and including an aperture that allows water to fill the chamber when placed on water, wherein the stabilizing structure is configured to fold.

15. The buoyant target of claim **14**, wherein the planes form eight 3-surface orthogonal reflectors each having a central reflection vector, and wherein the stabilizing structure is configured to orient the inflatable structure on a water surface

such that when the inflatable structure is in the inflated state, a first three of the central reflector vectors are tilted above horizontal at substantially equal angles of at least 10 degrees and a second three of the central reflector vectors are tilted below horizontal at substantially equal angles of at least 10 degrees.

16. The buoyant target of claim **14**, wherein the stabilizing structure is configured to orient the inflatable structure on a water surface such that when the inflatable structure is in the inflated state, the first three central reflector vectors are tilted above horizontal at substantially equal angles of about 20 degrees and the second three central reflector vectors are tilted below horizontal at substantially equal angles of about 20 degrees.

17. The buoyant target of claim **13**, wherein the radar reflector device comprises a plurality of reflective leaves formed of rigid material, the reflective leaves connected to each other by hinges, the reflective leaves configured to pivot or bend relative to each other at the hinges, the reflective leaves forming at least one of the three mutually orthogonal and intersecting planes.

18. The buoyant target of claim **1**, wherein inflatable structure includes an interior surface that is flat and substantially horizontal when the inflatable structure is in the inflated state on the water surface, and the radar reflector device is pulled against the interior surface by a rope, cord, or tie.

19. The buoyant target of claim **13**, further comprising a stabilizing structure connected to the inflatable structure, wherein each of the orthogonal reflectors has a central reflection vector oriented at substantially equal angles from each of the intersecting planes, and the stabilizing structure is configured to orient the inflatable structure on a water surface such that six central reflection vectors are tilted from horizontal at substantially equal angles of at least 10 degrees.

* * * * *