US008013780B2

(12) **United States Patent**
Lynam

(10) **Patent No.: US 8,013,780 B2**
(45) **Date of Patent: Sep. 6, 2011**

(54) **RADAR SENSING SYSTEM FOR VEHICLE**

(75) Inventor: **Niall R. Lynam**, Holland, MI (US)

(73) Assignee: **Magna Electronics Inc.** MI (US)

(*) Notice: Subject to any disclaimer, the term of this patent is extended or adjusted under 35 U.S.C. 154(b) by 244 days.

(21) Appl. No.: **12/524,446**

(22) PCT Filed: **Jan. 24, 2008**

(86) PCT No.: **PCT/US2008/051833**

§ 371 (c)(1),
(2), (4) Date: **Jul. 24, 2009**

(87) PCT Pub. No.: **WO2008/127752**

PCT Pub. Date: **Oct. 23, 2008**

(65) **Prior Publication Data**

US 2010/0001897 A1 Jan. 7, 2010

Related U.S. Application Data

(60) Provisional application No. 60/886,568, filed on Jan. 25, 2007.

(51) **Int. Cl.**
G01S 13/00 (2006.01)

(52) **U.S. Cl.** **342/70**; 342/52; 342/53; 342/54; 342/55

(58) **Field of Classification Search** 342/52–55, 342/70–72; 340/937; 701/117–119
See application file for complete search history.

(56) **References Cited**

U.S. PATENT DOCUMENTS

4,943,796	A	*	7/1990	Lee	340/435
5,550,677	A		8/1996	Schofield et al.	
5,585,798	A	*	12/1996	Yoshioka et al.	342/70
5,670,935	A		9/1997	Schofield et al.	
5,715,093	A		2/1998	Schierbeek et al.	
5,796,094	A		8/1998	Schofield et al.	
5,877,897	A		3/1999	Schofield et al.	
6,057,754	A	*	5/2000	Kinoshita et al.	340/435
6,067,110	A	*	5/2000	Nonaka et al.	348/148
6,085,151	A	*	7/2000	Farmer et al.	701/301
6,097,023	A		8/2000	Schofield et al.	
6,118,401	A	*	9/2000	Tognazzini	342/29
6,118,410	A	*	9/2000	Nagy	343/713

(Continued)

FOREIGN PATENT DOCUMENTS

EP 1506893 A2 2/2005

Primary Examiner — Thomas Tarcza
Assistant Examiner — Peter Bythrow
(74) *Attorney, Agent, or Firm* — Gardner, Linn, Burkham & Flory, LLP

(57) **ABSTRACT**

A radar sensing system for a vehicle includes a radar sensor device, a cover panel and a control. The radar sensor device is disposed at a pocket established at an upper edge of the vehicle windshield and having a forward transmitting and receiving direction that is not through the windshield. The cover panel is disposed at the radar sensor device and is substantially sealed at the vehicle windshield at or near the pocket at the upper edge of the vehicle windshield. The cover panel has a material that is substantially transmissive to radar frequency electromagnetic radiation waves. The radar sensor device emits radar frequency electromagnetic radiation waves that transmit through the cover panel. The control is responsive to an output of the radar sensor device.

35 Claims, 2 Drawing Sheets

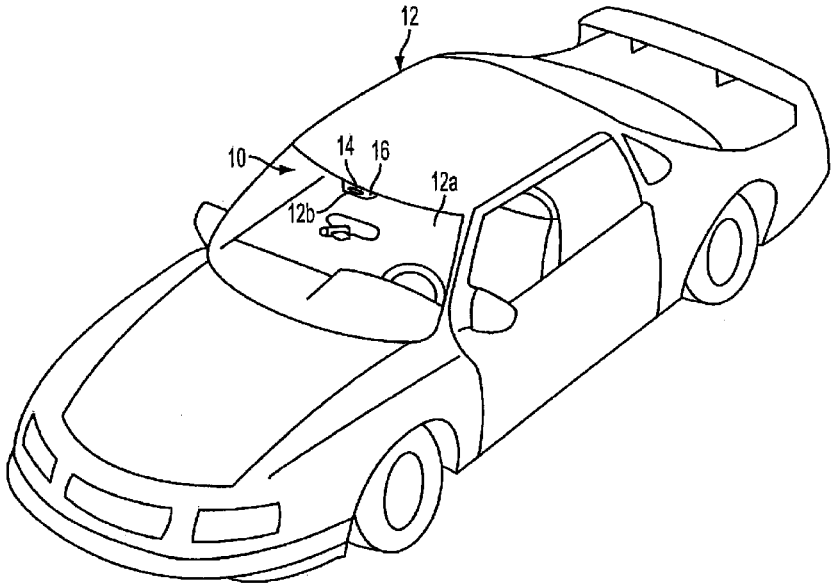

U.S. PATENT DOCUMENTS

6,201,642 B1 * 3/2001 Bos 359/565
6,216,540 B1 * 4/2001 Nelson et al. 73/633
6,313,454 B1 11/2001 Bos et al.
6,353,392 B1 3/2002 Schofield et al.
6,396,397 B1 * 5/2002 Bos et al. 340/461
6,492,935 B1 * 12/2002 Higuchi 342/70
6,498,620 B2 * 12/2002 Schofield et al. 348/148
6,580,385 B1 * 6/2003 Winner et al. 342/70
6,690,268 B2 2/2004 Schofield et al.
6,717,610 B1 4/2004 Bos et al.
6,757,109 B2 6/2004 Bos
6,771,208 B2 * 8/2004 Lutter et al. 342/52
6,795,014 B2 * 9/2004 Cheong 342/118
6,831,591 B2 * 12/2004 Horibe 342/52
6,903,677 B2 * 6/2005 Takashima et al. 342/70
6,941,211 B1 * 9/2005 Kuroda et al. 701/70
6,946,978 B2 * 9/2005 Schofield 340/995.28
7,004,606 B2 2/2006 Schofield
7,005,974 B2 2/2006 McMahon et al.
7,012,560 B2 * 3/2006 Braeuchle et al. 342/70
7,038,577 B2 5/2006 Pawlicki et al.
7,042,389 B2 * 5/2006 Shirai 342/70
7,123,168 B2 10/2006 Schofield
7,176,830 B2 * 2/2007 Horibe 342/70
7,432,848 B2 * 10/2008 Munakata 342/52
7,526,103 B2 * 4/2009 Schofield et al. 382/104
7,613,568 B2 * 11/2009 Kawasaki 701/301
7,706,978 B2 * 4/2010 Schiffmann et al. 701/301
7,765,065 B2 * 7/2010 Stiller 701/301
2003/0138132 A1 * 7/2003 Stam et al. 382/104
2003/0201929 A1 * 10/2003 Lutter et al. 342/52
2005/0104089 A1 * 5/2005 Engelmann et al. 257/204
2006/0091654 A1 * 5/2006 De Mersseman et al. 280/735
2010/0001897 A1 * 1/2010 Lyman 342/70
2011/0037640 A1 * 2/2011 Schmidlin 342/55

* cited by examiner

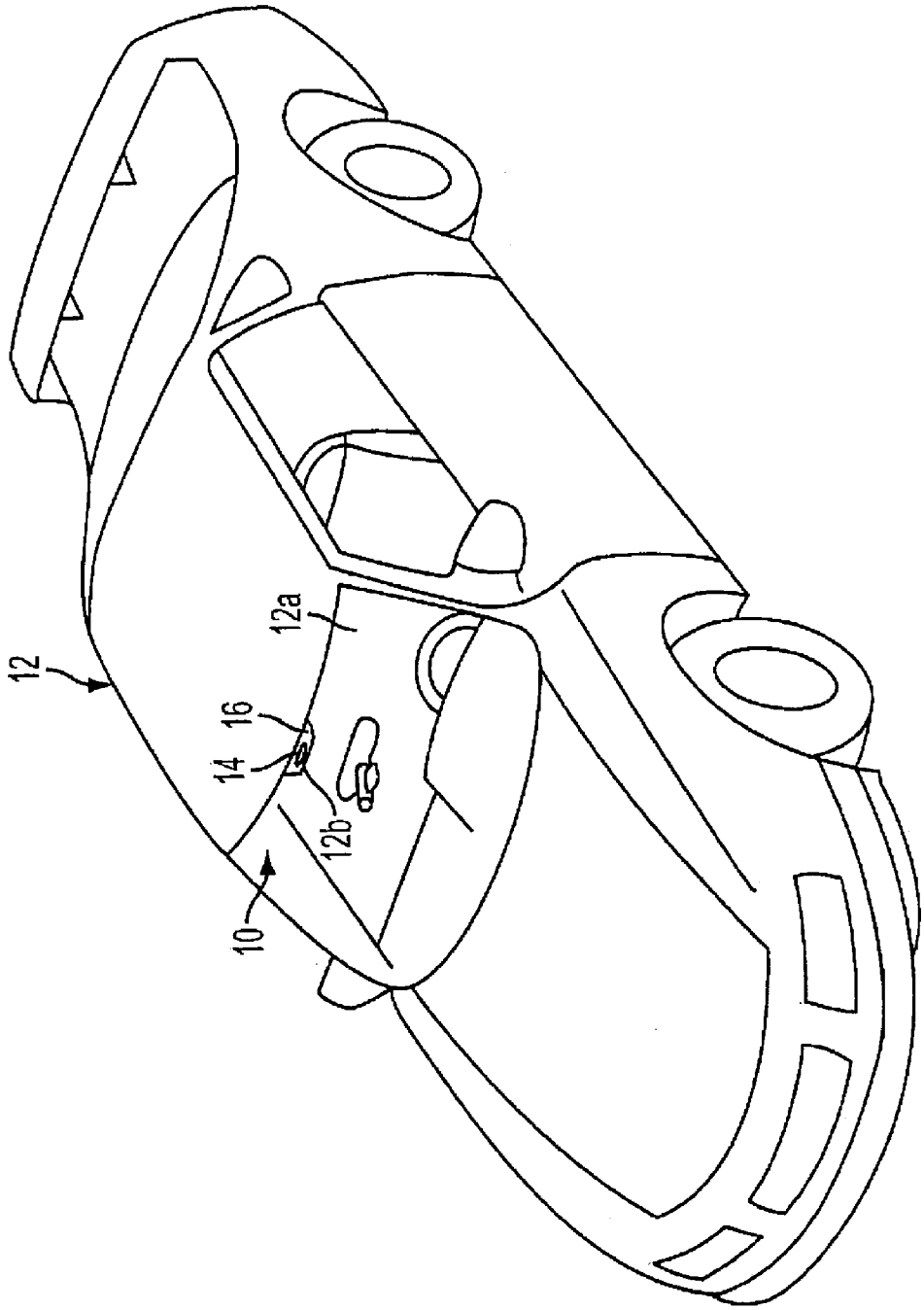

FIG. 1

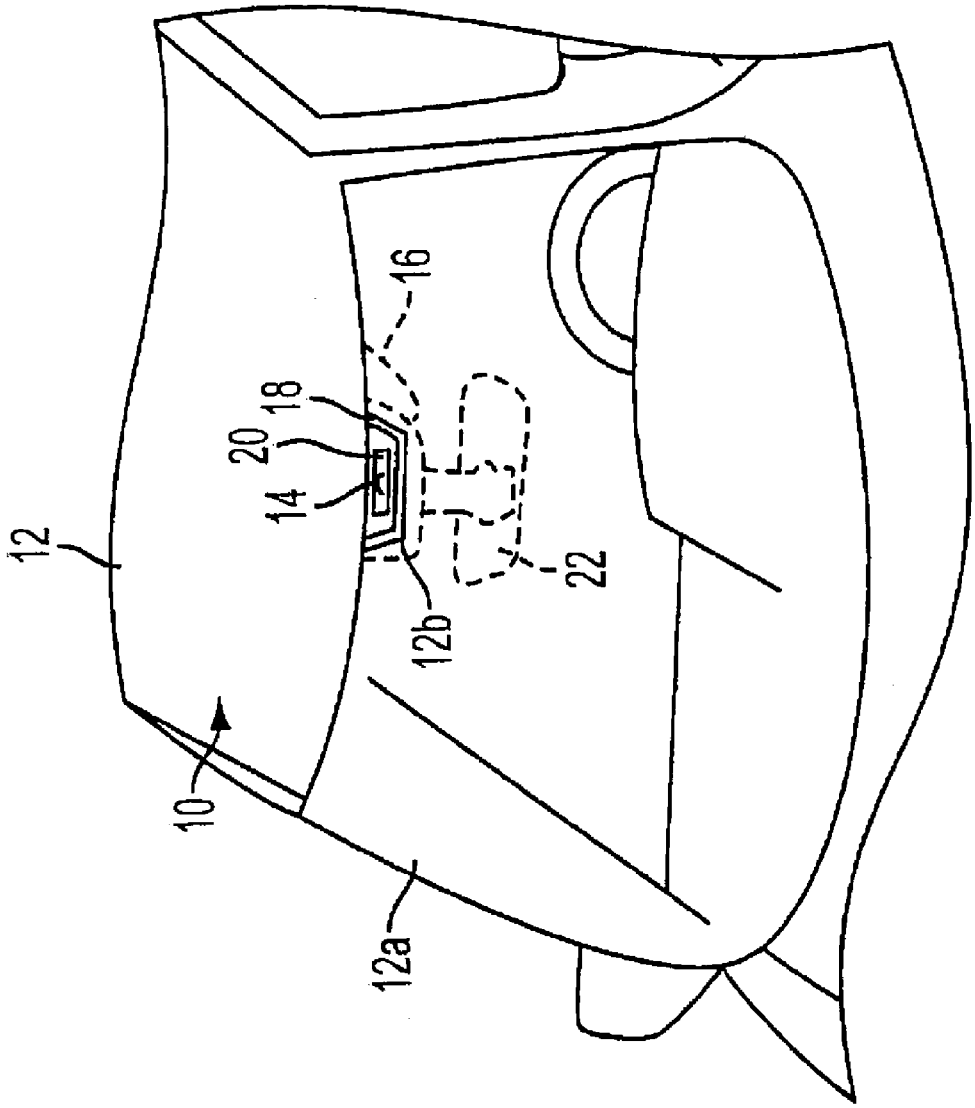

FIG. 2

RADAR SENSING SYSTEM FOR VEHICLE

CROSS REFERENCE TO RELATED APPLICATION

The present application claims the benefit of U.S. provisional application Ser. No. 60/886,568, filed Jan. 25, 2007, which is hereby incorporated herein by reference in its entirety.

FIELD OF THE INVENTION

The present invention generally relates to forward facing sensing systems and, more particularly, to forward facing sensing systems utilizing a radar sensor device.

BACKGROUND OF THE INVENTION

It is known to provide a radar (radio detection and ranging) system (such as a 77 GHz radar or other suitable frequency radar) on a vehicle for sensing the area forward of a vehicle, such as for an adaptive cruise control (ACC) system or an ACC stop and go system or the like. It is also known to provide a lidar (laser imaging detection and ranging) system for sensing the area forward of a vehicle for similar applications. Typically, the radar system is preferred for such vehicle applications because of its ability to detect better than the lidar system in fog or other inclement weather conditions.

Typically, such radar sensor devices are often located at the front grille of the vehicle and thus may be intrusive to the underhood packaging of the vehicle and the exterior styling of the vehicle. Although it is known to provide a lidar sensing device or system at the windshield for scanning/detecting through the windshield, radar systems are typically not suitable for such applications, since they typically are not suitable for viewing through glass, such as through the vehicle windshield (because the glass windshield may substantially attenuate the radar performance or ability to detect objects forward of the vehicle). It is also known to augment such a radar or lidar system with a forward facing camera or image sensor.

SUMMARY OF THE INVENTION

The present invention provides a forward facing sensing system for detecting objects forward of the vehicle (such as for use with or in conjunction with an adaptive cruise control system or other object detection system or the like), with a radar sensor device being located behind, and transmitting through [typically, transmitting at least about 20 GHz frequency (such as 24 GHz) and more preferably at least about 60 GHz frequency (such as 60 GHz or 77 GHz or 79 GHz or thereabouts)], a radar transmitting portion established at the upper windshield area of the vehicle. The radar sensor device is positioned at a recess or pocket or opening formed at and along the upper edge of the windshield so as to have a forward transmitting and receiving direction for radar electromagnetic waves that is not through the glass panels of the windshield. The vehicle or sensing system preferably includes a sealing or cover element, such as a plastic cover element at the sensing device to seal/environmentally protect the radar sensor device within the cabin of the vehicle while allowing for transmission of and receipt of radar frequency electromagnetic radiation waves to and from the exterior of the vehicle.

According to an aspect of the present invention, a forward facing sensing system or radar sensing system for a vehicle, includes a radar sensor device disposed at a pocket or recess or opening established at an upper edge of the vehicle windshield and having a forward transmitting and receiving direction that is not through the windshield. A cover panel is disposed at the radar sensor device and is substantially sealed at the vehicle windshield at or near the pocket at the upper edge of the vehicle windshield. The cover panel comprises a material that is substantially transmissive to radar frequency electromagnetic radiation waves. The radar sensor device transmits and receives radar frequency electromagnetic radiation waves that transmit through the cover panel. The system includes a control that is responsive to an output of the radar sensor device.

According to another aspect of the present invention, a forward facing sensing system for a vehicle includes a radar sensor device operable to detect an object ahead of the vehicle, a forward facing image sensor having a forward field of view, and a control responsive to an output of the radar sensor device and responsive to an output of the forward facing image sensor. The control is operable to control sensing by the radar sensor device and the control is operable to control a focused or enhanced interrogation of a detected object (or area at which a detected object is detected) in response to a detection of an object forward of the vehicle by the radar sensor device. The control may be operable to at least one of (a) control enhanced interrogation of a detected object by the radar sensor device in response to the forward facing image sensor detecting an object (such as by enhancing the interrogation via a beam aiming or beam selection technique, such as by digital beam forming in a phased array antenna system or such as by digital beam steering or the like), and (b) control enhanced interrogation of a detected object by the forward facing image sensor in response to the radar sensor device detecting an object (such as by enhancing the interrogation via enhanced or intensified algorithmic processing of a portion of the image plane of the image sensor that is spatially related to the location of the detected object in the forward field of view of the image sensor). The control thus may be responsive to the forward facing image sensor to guide or control the focused interrogation of the detected object by the radar sensor device, or the control may be responsive to the radar sensor device to guide or control the focused or enhanced interrogation of the detected object by the forward facing image sensor (such as via directing or controlling the image sensor and/or its field of view or zoom function or via image processing of the captured image data, such as by providing enhanced processing of the area at which the object is detected).

Optionally, and desirably, the forward facing image sensor and the radar sensor device may be commonly established on a semiconductor substrate. Optionally, the semiconductor substrate may comprise one of (i) a germanium substrate, (ii) a gallium arsenide substrate, and (iii) a silicon germanium substrate.

These and other objects, advantages, purposes and features of the present invention will become apparent upon review of the following specification in conjunction with the drawings.

BRIEF DESCRIPTION OF THE DRAWINGS

FIG. **1** is a perspective view of a vehicle incorporating a forward facing radar sensing system in accordance with the present invention; and

FIG. **2** is a perspective view of a windshield and radar sensing system of the present invention.

DESCRIPTION OF THE PREFERRED EMBODIMENTS

Referring now to the drawings and the illustrative embodiments depicted therein, a sensing system or forward facing

sensing system or radar sensing system **10** for a vehicle **12** includes a radar sensor device **14** at an upper region of the vehicle windshield **12***a* and with a forward transmitting and sensing direction forward of the vehicle and in the forward direction of travel of the vehicle (FIG. **1**). The windshield glass **12***a* may be formed with a cutout or pocket **12***b* at the upper edge. The pocket may be cut from the glass (so as to provide a cut opening at the upper edge of the glass windshield) or the glass may be formed with an inward bulge or pocket that provides an opening for the sensing device. The radar sensor device **14** thus may be disposed at the pocket **12***b* and may have a clear or unobstructed view or sensing direction forward of the vehicle that does not pass through glass (and whereby the glass windshield will not attenuate the performance of the radar sensor device). Because the upper region of the vehicle windshield is typically not used, the radar sensor device **14** may be disposed thereat without being intrusive of other systems or elements and without adversely affecting the vehicle design and/or layout. The sensing system **10** is operable to detect objects or vehicles or the like in front of the vehicle as the vehicle is traveling along a road, such as in conjunction with an adaptive cruise control system or the like. Although shown and described as being a forward facing sensing system, aspects of the present invention may be suitable for other sensing systems, such as a rearward facing sensing system or the like.

Radar sensor device **14** thus may be disposed within a windshield electronics module **16** or accessory module or overhead console of the vehicle, and within the vehicle cabin, without experiencing the adverse performance caused by the attenuation of radio or radar frequency electromagnetic radiation wave transmission through the windshield glass. Optionally, the vehicle sheet metal may be adapted to receive and/or support the radar sensor device at the upper edge of the windshield, or to accommodate the radar sensor device as disposed in and/or supported by the windshield electronics module or the like.

In order to seal the upper edge of the windshield at the pocket **12***b*, a cover element or plate **18** may be provided that substantially or entirely spans the opening at the pocket and that is sealed at the glass windshield and vehicle around the perimeter of the pocket, so as to limit or substantially preclude water intrusion or the like into the vehicle at the radar sensor device. The cover element **18** preferably comprises a plastic or polymeric or polycarbonate material that is transmissive to radar waves so as to limit or substantially preclude an adverse effect on the performance of the radar sensor device and system. Optionally, and desirably, the cover element may be colored to match or substantially match the shade band along the upper region of the windshield or to match or substantially match the windshield electronics module or other interior or exterior component of the vehicle. Because the radar sensor device does not require a transparent cover, the cover element may be opaque or substantially opaque and/or may function to substantially camouflage or render covert the sensor device and/or the windshield electronics module or the like.

The radar sensor device may utilize known transmitting and receiving technology and may utilize a sweeping beam or a phased array or the like for scanning or sensing or interrogating the area in front of the vehicle. Optionally, the forward facing radar sensing system may include or may be associated with a forward facing camera or imaging sensor **20** (which may be disposed at or in the windshield electronics module or accessory module or overhead console or at another accessory module or windshield electronics module or at the interior rearview mirror assembly **22** or the like), which has a forward field of view in the forward direction of travel of the vehicle. The sensing system may function to perform a "sweep" of the area in front of the vehicle and if an object or the like is detected (e.g., the radar sensing system detects a "blip"), the radar sensor device and system may hone in on or focus on or further interrogate the region where the object is detected and may perform a more focused or enhanced interrogation of the area at which the object was detected to determine if the object is an object of interest. Optionally, for example, the system may control enhanced interrogation of a detected object by the radar sensor device (such as a beam aiming or beam selection technique, such as by digital beam forming in a phased array antenna system or such as by digital beam steering). Such enhanced interrogation by the radar sensor device may be in response to the forward facing image sensor detecting an object in its forward field of view.

Optionally, and desirably, the forward facing camera may guide or initiate or control the more focused interrogation of the suspected object of interest (such as further or enhanced interrogation by the camera and imaging system) in response to the initial detection by the radar sensing system. For example, the radar sensing system may initially detect an object and the forward facing camera may be directed toward the detected object or otherwise controlled or processed to further interrogate the detected object (or area at which the object is detected) via the camera and image processing, or, alternately, the forward facing camera may initially detect an object and the system may select or aim a radar beam in a direction of a detected object. The enhanced interrogation of the object area by the forward facing camera may be accomplished via control of the camera's field of view or degree of zoom [for example, the camera may zoom into the area (via adjustment of a lens of the camera to enlarge an area of the field of view for enhanced processing) at which the object is detected] or via control of the image processing techniques. For example, the image processor may provide enhanced processing of the captured image data at the area or zone at which the object is detected, such as by enhanced or intensified algorithmic processing of a portion of the image plane of the image sensor that is spatially related to the location of the detected object in the forward field of view of the image sensor, such as by enhanced processing of pixel outputs of pixels within a zone or sub-array of a pixelated imaging array sensor, such as by utilizing aspects of the imaging systems described in U.S. Pat. Nos. 7,123,168; 7,038,577; 7,004,606; 6,690,268; 6,396,397; 5,550,677; 5,670,935; 5,796,094; 5,877,897; and 6,498,620, and/or U.S. patent applications, Ser. No. 11/239,980, filed Sep. 30, 2005; and/or Ser. No. 11/315,675, filed Dec. 22, 2005, which are all hereby incorporated herein by reference in their entireties.

Thus, the sensing system of the present invention provides for cooperation or collaboration between the radar sensor device and the forward facing camera or image sensor in a way that benefits or enhances the sensing capabilities of the forward facing sensing system. The sensing system may thus operate with reduced processing until an object is initially detected, and then may provide further processing to determine if the object is an object of interest to the forward facing sensing system.

Optionally, and desirably, the radar sensor device and forward facing camera may be commonly established on a semiconductor substrate, such as a substrate comprising a germanium substrate, a gallium arsenide substrate or a silicon germanium substrate or the like. The substrate may include or may incorporate at least some of the control circuitry for the

radar sensor device and camera and/or may include or incorporate common circuitry for the radar sensor device and camera.

Because the radar sensor device and camera may be disposed on a common substrate and/or may be disposed within a windshield electronics module or the like, the forward facing sensing system may be removably installed at the vehicle and may be removed therefrom, such as for service or replacement. Thus, the sensing system (including the radar sensor device and camera) may comprise a self-contained unit or system that is disposed at the upper region of the windshield. Optionally, the radar sensor device and/or camera may be disposed within a windshield electronics module or the like, such as by utilizing aspects of the modules described in U.S. patent applications, Ser. No. 10/958,087, filed Oct. 4, 2004 by Schofield et al. for VEHICLE ACCESSORY MODULE, now U.S. Pat. No. 7,188,963; and/or Ser. No. 11/201,661, filed Aug. 11, 2005, and/or U.S. Pat. Nos. 7,004,593; 6,824,281; 6,690,268; 6,250,148; 6,341,523; 6,593,565; 6,428,172; 6,501,387; 6,329,925; and 6,326,613, and/or in PCT Application No. PCT/US03/40611, filed Dec. 19, 2003 by Donnelly Corp. et al. for ACCESSORY SYSTEM FOR VEHICLE, and published Jul. 15, 2004 as International Publication No. WO 2004/058540, and/or Ireland pat. applications, Ser. No. S2004/0614, filed Sep. 15, 2004; Ser. No. S2004/0838, filed Dec. 14, 2004; and Ser. No. S2004/0840, filed Dec. 15, 2004, which are all hereby incorporated herein by reference in their entireties.

Optionally, the mirror assembly and/or windshield electronics module may include or incorporate a display, such as a static display, such as a static video display screen (such as a display utilizing aspects of the displays described in U.S. Pat. Nos. 5,530,240 and/or 6,329,925, which are hereby incorporated herein by reference in their entireties, or a display-on-demand or transflective type display or other display utilizing aspects of the displays described in U.S. Pat. Nos. 6,690,268; 5,668,663 and/or 5,724,187, and/or U.S. patent applications, Ser. No. 10/054,633, filed Jan. 22, 2002 by Lynam et al. for VEHICULAR LIGHTING SYSTEM, now U.S. Pat. No. 7,195,381; Ser. No. 11/021,065, filed Dec. 23, 2004 by McCabe et al. for ELECTRO-OPTIC MIRROR CELL, now U.S. Pat. No. 7,255,451; Ser. No. 10/528,269, filed Mar. 17, 2005, now U.S. Pat. No. 7,274,501; Ser. No. 10/533,762, filed May 4, 2005, now U.S. Pat. No. 7,184,190; Ser. No. 10/538,724, filed Jun. 13, 2005 by Hutzel et al. for ACCESSORY SYSTEM FOR VEHICLE; Ser. No. 11/226,628, filed Sep. 14, 2005 by Karner et al.; Ser. No. 10/993,302, filed Nov. 19, 2004; and/or Ser. No. 11/284,543, filed Nov. 22, 2005, and/or PCT Patent Application No. PCT/US2006/018567, filed May 15, 2006 by Donnelly Corp. et al., published Nov. 23, 2006 as International Publication No. WO 2006/124682; and/or PCT Application No. PCT/US2006/042718, filed Oct. 31, 2006, published May 10, 2007 as International Publication No. WO 07/053710; and U.S. provisional applications, Ser. No. 60/836,219, filed Aug. 8, 2006 by Weller et al. for INTERIOR REARVIEW MIRROR ASSEMBLY WITH DISPLAY; Ser. No. 60/759,992, filed Jan. 18, 2006; and Ser. No. 60/732,245, filed Nov. 1, 2005, and/or PCT Application No. PCT/US03/40611, filed Dec. 19, 2003 by Donnelly Corp. et al. for ACCESSORY SYSTEM FOR VEHICLE, and published Jul. 15, 2004 as International Publication No. WO 2004/058540, which are all hereby incorporated herein by reference in their entireties). Alternately, the display screen may comprise a display (such as a backlit LCD video display) that is movable to extend from the mirror casing when activated, such as a slide-out display of the types described in U.S. patent applications, Ser. No. 10/538,724, filed Jun. 13, 2005 by Hutzel et al. for ACCESSORY SYSTEM FOR VEHICLE; and/or Ser. No. 11/284,543, filed Nov. 22, 2005, and/or PCT Patent Application No. PCT/US2006/018567, filed May 15, 2006 by Donnelly Corp. et al., and published Nov. 23, 2006 as International Publication No. WO 2006/124682; and/or PCT Application No. PCT/US2006/042718, filed Oct. 31, 2006, and published May 10, 2007 as International Publication No. WO 07/053710; and U.S. provisional applications, Ser. No. 60/836,219, filed Aug. 8, 2006 by Weller et al. for INTERIOR REARVIEW MIRROR ASSEMBLY WITH DISPLAY; Ser. No. 60/759,992, filed Jan. 18, 2006; and Ser. No. 60/732,245, filed Nov. 1, 2005, which are all hereby incorporated herein by reference in their entireties. Optionally, and preferably, the display is episodically extended and/or actuated, such as to display driving instructions to the driver as the vehicle approaches a waypoint or turn along the selected route, and then retracted after the vehicle has passed the waypoint and continues along the selected route.

Optionally, the display on the video screen may be operable to display an alert to the driver of a potential hazardous condition detected ahead of or in the forward path of the vehicle. For example, an output of a forward-viewing active night vision system incorporating an imaging sensor or camera device and near-IR floodlighting (such as those described in U.S. Pat. No. 5,877,897 and U.S. patent application Ser. No. 11/651,726, filed Jan. 10, 2007 by Schofield et al. for IMAGE SENSING SYSTEM FOR A VEHICLE, now U.S. Pat. No. 7,311,406, which are hereby incorporated herein by reference in their entireties), or an output of another suitable forward facing sensor or system such a passive far-IR thermal imaging night vision sensor/camera, may be processed by an image processor, such as, for example, an EyeQ™ image processing chip available from Mobileye Vision Technologies Ltd. of Jerusalem, Israel. Such image processors include object detection software (such as the types described in U.S. Pat. No. 7,038,577; and/or Ser. No. 11/315,675, filed Dec. 22, 2005 by Higgins-Luthman for OBJECT DETECTION SYSTEM FOR VEHICLE, which are hereby incorporated herein by reference in their entireties), and they analyze image data to detect objects. The image processor or control may determine if a potentially hazardous condition (such as an object or vehicle or person or deer or the like) may exist in the vehicle path and may provide an alert signal (such as by actuation of a visual indicator or an audible indicator or by an enhancement/overlay on a video display screen that is showing a video image to the driver of what the night vision sensor/camera is seeing) to prompt/alert the driver of a potential hazard (such as a deer or a pedestrian or a fallen rock or the like) as needed or appropriate. The display thus may provide an episodal alert so that the driver's attention is drawn to the display alert only when there is a potential hazard detected. Such a system avoids the driver from having to look forward out the windshield while often looking to or watching a monitor running a video of the camera's output, which is not particularly consumer-friendly and simply loads the driver with yet another task.

Optionally, the mirror reflective element of the mirror assembly may comprise a prismatic mirror reflector or an electrically variable reflectance mirror reflector, such as an electro-optic reflective element assembly or cell, such as an electrochromic reflective element assembly or cell. For example, the rearview mirror assembly may comprise an electro-optic or electrochromic reflective element or cell, such as an electrochromic mirror assembly and electrochromic reflective element utilizing principles disclosed in commonly assigned U.S. Pat. Nos. 6,690,268; 5,140,455; 5,151,

816; 6,178,034; 6,154,306; 6,002,544; 5,567,360; 5,525,264; 5,610,756; 5,406,414; 5,253,109; 5,076,673; 5,073,012; 5,117,346; 5,724,187; 5,668,663; 5,910,854; 5,142,407; 4,824,221; 5,818,636; 6,166,847; 6,111,685; 6,392,783; 6,710,906; 6,798,556; 6,554,843; 6,420,036; 5,142,406; 5,442,478; and/or 4,712,879, and/or 4,712,879, and/or U.S. patent applications, Ser. No. 10/054,633, filed Jan. 22, 2002 by Lynam et al. for VEHICULAR LIGHTING SYSTEM, now U.S. Pat. No. 7,195,381; Ser. No. 11/021,065, filed Dec. 23, 2004 by McCabe et al. for ELECTRO-OPTIC MIRROR CELL, now U.S. Pat. No. 7,255,451; Ser. No. 10/528,269, filed Mar. 17, 2005, now U.S. Pat. No. 7,274,501; Ser. No. 10/533,762, filed May 4, 2005, now U.S. Pat. No. 7,184,190; Ser. No. 10/538,724, filed Jun. 13, 2005 by Hutzel et al. for ACCESSORY SYSTEM FOR VEHICLE ; Ser. No. 11/226, 628, filed Sep. 14, 2005 by Karner et al. ; Ser. No. 10/993,302, filed Nov. 19, 2004; and/or Ser. No. 11/284,543, filed Nov. 22, 2005, and/or International Pat. Publication Nos. WO 2004/098953, published Nov. 18, 2004; WO 2004/042457, published May 21, 2004; WO 2003/084780, published Oct. 16, 2003; and/or WO 2004/026633, published Apr. 1, 2004, which are all hereby incorporated herein by reference in their entireties, and/or such as disclosed in the following publications: N. R. Lynam, "Electrochromic Automotive Day/Night Mirrors", SAE Technical Paper Series 870636 (1987); N. R. Lynam, "Smart Windows for Automobiles", SAE Technical Paper Series 900419 (1990); N. R. Lynam and A. Agrawal, "Automotive Applications of Chromogenic Materials", Large Area Chromogenics: Materials and Devices for Transmittance Control, C. M. Lampert and C. G. Granquist, EDS., Optical Engineering Press, Wash. (1990), which are hereby incorporated herein by reference in their entireties.

Optionally, and preferably, the mirror reflective element may comprise a frameless reflective element, such as by utilizing aspects of the reflective elements described in PCT Application No. PCT/US2006/018567, filed May 15, 2006 by Donnelly Corp. et al., and published Nov. 23, 2006 as International Publication No. WO 2006/124682; PCT Application No. PCT/US2004/015424, filed May 18, 2004 by Donnelly Corp. et al. for MIRROR ASSEMBLY FOR VEHICLE, and published on Dec. 2, 2004, as International Publication No. WO 2004/103772; and/or U.S. patent applications, Ser. No. 11/140,396, filed May 27, 2005; Ser. No. 11/226,628, filed Sep. 14, 2005; Ser. No. 11/021,065, filed Dec. 23, 2004, now U.S. Pat. No. 7,255,451; Ser. No. 10/528,269, filed Mar. 17, 2005, now U.S. Pat. No. 7,274,501; Ser. No. 10/533,762, filed May 4, 2005, now U.S. Pat. No. 7,184,190; and/or Ser. No. 10/538,724, filed Jun. 13, 2005, which are hereby incorporated herein by reference in their entireties. Optionally, the reflective element may include a metallic perimeter band around the perimeter of the reflective element, such as by utilizing aspects of the reflective elements described in PCT Application No. PCT/US2006/018567, filed May 15, 2006 by Donnelly Corp. et al., and published Nov. 23, 2006 as International Publication No. WO 2006/124682; PCT Application No. PCT/US03/29776, filed Sep. 19, 2003 by Donnelly Corp. et al. for ELECTROCHROMIC MIRROR ASSEMBLY, and published Apr. 1, 2004 as International Publication No. WO 2004/026633; and/or PCT Application No. PCT/US03/35381, filed Nov. 5, 2003 by Donnelly Corp. et al. for ELECTRO-OPTIC REFLECTIVE ELEMENT ASSEMBLY, and published May 21, 2004 as International Publication No. WO 2004/042457; and/or U.S. patent applications, Ser. No. 11/021,065, filed Dec. 23, 2004 by McCabe et al. for ELECTRO-OPTIC MIRROR CELL, now U.S. Pat. No. 7,255,45 1; and/or Ser. No. 11/226,628, filed Sep. 14, 2005 by Karner et al. for MOUNTING ASSEMBLY FOR VEHICLE INTERIOR MIRROR, which is hereby incorporated herein by reference in their entireties. The frameless reflective element thus is aesthetically pleasing to a person viewing the mirror assembly, since the reflective element (as recessed or partially recessed in the opening of the bezel portion of the mirror casing) does not include a separate frame or bezel portion around its perimeter edge. The metallic perimeter band may be selected to have a desired color or tint to match or contrast a color scheme or the like of the vehicle, such as described in PCT Application No. PCT/US2006/018567, filed May 15, 2006 by Donnelly Corp. et al., and published Nov. 23, 2006 as International Publication No. WO 2006/124682; and/or PCT Application No. PCT/US2004/015424, filed May 18, 2004 by Donnelly Corp. et al. for MIRROR ASSEMBLY FOR VEHICLE, and published Dec. 2, 2004 as International Publication No. WO 2004/103772, which are hereby incorporated herein by reference in their entireties.

Optionally, use of an elemental semiconductor mirror, such as a silicon metal mirror, such as disclosed in U.S. Pat. Nos. 6,286,965; 6,196,688; 5,535,056; 5,751,489; and 6,065,840, and/or in U.S. patent application, Ser. No. 10/993,302, filed Nov. 19, 2004 by Lynam for MIRROR REFLECTIVE ELEMENT FOR A VEHICLE, which are all hereby incorporated herein by reference in their entireties, can be advantageous because such elemental semiconductor mirrors (such as can be formed by depositing a thin film of silicon) can be greater than 50 percent reflecting in the photopic (SAE J964a measured), while being also substantially transmitting of light (up to 20 percent or even more). Such silicon mirrors also have the advantage of being able to be deposited onto a flat glass substrate and to be bent into a curved (such as a convex or aspheric) curvature, which is also advantageous since many passenger-side exterior rearview mirrors are bent or curved.

Optionally, the mirror assembly may comprise a prismatic mirror assembly, such as a prismatic mirror assembly utilizing aspects described in U.S. Pat. Nos. 6,318,870; 6,598,980; 5,327,288; 4,948,242; 4,826,289; 4,436,371; and 4,435,042; and PCT Application No. PCT/US04/015424, filed May 18, 2004 by Donnelly Corporation et al. for MIRROR ASSEMBLY FOR VEHICLE, and published Dec. 2, 2004 as International Publication No. WO 2004/103772; and U.S. patent application, Ser. No. 10/933,842, filed Sep. 3, 2004, now U.S. Pat. No. 7,249,860, which are hereby incorporated herein by reference in their entireties.

Optionally, the prismatic reflective element may comprise a conventional prismatic reflective element or prism, or may comprise a prismatic reflective element of the types described in PCT Application No. PCT/US03/29776, filed Sep. 19, 2003 by Donnelly Corp. et al. for MIRROR REFLECTIVE ELEMENT ASSEMBLY, and published Apr. 1, 2004 as International Publication No. WO 2004/026633; and/or U.S. patent applications, Ser. No. 10/709,434, filed May 5, 2004 by Lynam for MIRROR REFLECTIVE ELEMENT; Ser. No. 10/933,842, filed Sep. 3, 2004 by Kulas et al. for INTERIOR REARVIEW MIRROR ASSEMBLY, now U.S. Pat. No. 7,249,860; Ser. No. 11/021,065, filed Dec.23, 2004 by McCabe et al. for ELECTRO-OPTIC MIRROR CELL, now U.S. Pat. No. 7,255,451; Ser. No. 10/528,269, filed Mar. 17, 2005, now U.S. Pat. No. 7,274,501; and/or Ser. No. 10/993, 302, filed Nov. 19, 2004 by Lynam for MIRROR REFLECTIVE ELEMENT FOR A VEHICLE, and/or PCT Application No. PCT/US2004/015424, filed May 18, 2004 by Donnelly Corp. et al. for MIRROR ASSEMBLY FOR VEHICLE, and published Dec. 2,2004 as International Publication No. WO 2004/103772, which are all hereby incorpo-

rated herein by reference in their entireties, without affecting the scope of the present invention.

Optionally, the reflective element may comprise a bent, wide-angle mirror reflector rather than a flat mirror reflector. If a bent, wide-angle mirror reflector is used, it is preferable that the mirror reflector comprise a glass substrate coated with a bendable reflector coating (such as of silicon as described in U.S. Pat. Nos. 6,065,840; 5,959,792; 5,535,056 and 5,751,489, which are hereby incorporated by reference herein in their entireties.

Optionally, the mirror casing and/or windshield electronics module may be suitable for supporting larger or heavier components or circuitry that otherwise may not have been suitable for mounting or locating at or in a mirror casing. For example, the mirror casing or module may house or support a battery or power pack for various electronic features or components, and/or may support a docking station for docking and/or holding a cellular telephone or hand-held personal data device or the like, such as by utilizing aspects of the systems described in U.S. Pat. No. 6,824,281, and/or PCT Application No. PCT/US03/40611, filed Dec. 19,2003 by Donnelly Corporation for ACCESSORY SYSTEM FOR VEHICLE, and published Jul. 15, 2004 as International Publication No. WO 2004/058540, and/or U.S. patent application Ser. No. 10/510,813, filed Aug. 23, 2002 by Berberich et al. for COVER MODULE, now U.S. Patent Application Publication No. US2005/0151396A1, published Jul. 14, 2005, and/or U.S. patent applications, Ser. No. 11/842,328, filed Aug. 21, 2007, and Ser. No. 11/861,904, filed Sep. 26, 2007, and/or U.S. provisional application, Ser. No. 60/839,446, filed Aug. 23, 2006 by DeWard for VEHICLE INTERIOR REARVIEW MIRROR ASSEMBLY WITH ACTUATOR; Ser. No. 60/879,619, filed Jan. 10, 2007; Ser. No. Ser. No. 60/850,700, filed Oct. 10, 2006; and/or Ser. No. 60/847,502, filed Sep. 27, 2006 by Kramer for MULTIMEDIA MIRROR ASSEMBLY FOR VEHICLE, which are hereby incorporated herein by reference in their entireties.

Optionally, the mirror assembly and/or windshield electronics module may include or incorporate a navigation device that may include navigational circuitry and a GPS antenna to determine the geographical location of the vehicle and to provide routes to targeted or selected destinations, such as by utilizing aspects of known navigational devices and/or the devices of the types described in U.S. Pat. Nos. 4,862,594; 4,937,945; 5,131,154; 5,255,442; 5,632,092; 5,798,688; 5,971,552; 5,924,212; 6,243,003; 6,278,377; 6,420,975; 6,946,978; 6,477,464; 6,678,614; and/or 7,004,593, and/or U.S. pat. applications, Ser. No. 10/645,762, filed Aug. 20, 2003 by Taylor et al. for VEHICLE NAVIGATION SYSTEM FOR USE WITH A TELEMATICS SYSTEM, now U.S. Pat. No. 7,167,796; Ser. No. 10/529,715, filed Mar. 30, 2005 by Larson et al. for MICROPHONE SYSTEM FOR VEHICLE; Ser. No. 10/538,724, filed Jun. 13, 2005 by Hutzel et al. for ACCESSORY SYSTEM FOR VEHICLE; Ser. No. 11/861,904, filed Sep. 26, 2007; and/or Ser. No. 10/964,512, filed Oct. 13, 2004, now U.S. Pat. No. 7,308,341, and/or U.S. provisional applications, Ser. No. 60/879,619, filed Jan. 10, 2007; Ser. No. Ser. No. 60/850,700, filed Oct. 10, 2006; and/or Ser. No. 60/847,502, filed Sep. 27, 2006 by Kramer for MULTIMEDIA MIRROR ASSEMBLY FOR VEHICLE, which are all hereby incorporated herein by reference in their entireties. Optionally, the mirror or navigation device may include a microphone, whereby the mirror or navigation device may provide voice activated control of the navigation device.

Optionally, for example, the mounting structure and/or mirror casing and/or windshield electronics module may support compass sensors, such as compass sensors of the types described in may utilize aspects of the compass systems described in U.S. patent applications, Ser. No. 11/305,637, filed Dec. 16, 2005 by Blank et al. for INTERIOR REARVIEW MIRROR SYSTEM WITH COMPASS; Ser. No. 10/352,691, filed Jan. 28, 2003 by Schierbeek et al. for VEHICLE COMPASS COMPENSATION, now U.S. Pat. No. 6,922,902; Ser. No. 11/284,543, filed Nov. 22, 2005; Ser. No. 11/226,628, filed Sep. 14, 2005; and/or Ser. No. 10/933,842, filed Sep. 3, 2004 by Kulas et al. for INTERIOR REARVIEW MIRROR ASSEMBLY, now U.S. Pat. No. 7,249,860; and/or U.S. Pat. Nos. 7,004,593; 4,546,551; 5,699,044; 4,953,305; 5,576,687; 5,632,092; 5,677,851; 5,708,410; 5,737,226; 5,802,727; 5,878,370; 6,087,953; 6,173,508; 6,222,460; 6,513,252; and 6,642,851, and/or PCT Application No. PCT/US2004/015424, filed May 18, 2004 by Donnelly Corp. et al. for MIRROR ASSEMBLY FOR VEHICLE, and published Dec. 2, 2004 as International Publication No. WO 2004/103772, and/or European patent application, published Oct. 11, 2000 under Publication No. EP 0 1043566, which are all hereby incorporated herein by reference in their entireties. The compass circuitry may include the compass sensor, such as a magneto-responsive sensor, such as a magneto-resistive sensor, such as the types disclosed in U.S. Pat. Nos. 5,255,442; 5,632,092; 5,802,727; 6,173,501; 6,427,349; and 6,513,252 (which are hereby incorporated herein by reference in their entireties), a magneto-capacitive sensor, a Hall-effect sensor, such as the types described in U.S. Pat. Nos. 6,278,271; 5,942,895 and 6,184,679 (which are hereby incorporated herein by reference in their entireties), a magneto-inductive sensor, such as described in U.S. Pat. No. 5,878,370 (which is hereby incorporated herein by reference in its entirety), a magneto-impedance sensor, such as the types described in PCT Publication No. WO 2004/076971 A2, published Sep. 10, 2004 (which is hereby incorporated herein by reference in its entirety), or a flux-gate sensor or the like, and/or may comprise a compass chip, such as described in U.S. patent applications, Ser. No. 11/226,628, filed Sep. 14, 2005; and/or Ser. No. 11/284,543, filed Nov. 22, 2005, which are hereby incorporated herein by reference in their entireties. By positioning the compass sensors at a fixed location, further processing and calibration of the sensors to accommodate adjustment or movement of the sensors is not necessary.

Optionally, the mounting structure and/or mirror casing and/or windshield electronics module may support one or more imaging sensors or cameras, and may fixedly support them with the cameras set with a desired or appropriate forward and/or rearward field of view. For example, the camera may be operable in conjunction with a forward facing imaging system, such as a rain sensing system, such as described in U.S. Pat. Nos. 6,968,736; 6,806,452; 6,516,664; 6,353,392; 6,313,454; 6,250,148; 6,341,523; and 6,824,281, and in U.S. pat. applications, Ser. No.10/958,087, filed Oct. 4, 2004 by Schofield et al. for VEHICLE ACCESSORY MODULE, now U.S. Pat. No. 7,188,963; and/or Ser. No. 11/201,661, filed Aug. 11, 2005 by DeWard et al. for ACCESSORY MODULE FOR VEHICLE, which are all hereby incorporated herein by reference in their entireties. The mounting structure and/or mirror casing may be pressed or loaded against the interior surface of the windshield to position or locate the image sensor in close proximity to the windshield and/or to optically couple the image sensor at the windshield. The mounting structure and/or mirror casing may include an aperture or apertures at its forward facing or mounting surface and the windshield may include apertures through the opaque frit layer (typically disposed at a mirror mounting location of a

windshield) or the windshield may not include such a frit layer, depending on the particular application.

Optionally, the image sensor may be operable in conjunction with a forward or rearward vision system, such as an automatic headlamp control system and/or a lane departure warning system or object detection system and/or other forward vision or imaging systems, such as imaging or vision systems of the types described in U.S. Pat. Nos. 7,038,577; 7,005,974; 7,004,606; 6,690,268; 6,946,978; 6,757,109; 6,717,610; 6,396,397; 6,201,642; 6,353,392; 6,313,454; 5,550,677; 5,670,935; 5,796,094; 5,715,093; 5,877,897; 6,097,023; and 6,498,620, and/or U.S. patent applications, Ser. No. 09/441,341, filed Nov. 16, 1999 by Schofield et al. for VEHICLE HEADLIGHT CONTROL USING IMAGING SENSOR; Ser. No. 10/422,512, filed Apr. 24, 2003, now U.S. Pat. No. 7,123,168; Ser. No. 11/239,980, filed Sep. 30, 2005; Ser. No. 11/672,070, filed Feb. 7, 2007; and/or Ser. No. 11/315,675, filed Dec. 22, 2005 by Higgins-Luthman for OBJECT DETECTION SYSTEM FOR VEHICLE, and/or U.S. provisional applications, Ser. No. 60/628,709, filed Nov. 17, 2004 by Camilleri et al. for IMAGING AND DISPLAY SYSTEM FOR VEHICLE; Ser. No. 60/614,644, filed Sep. 30, 2004; Ser. No. 60/618,686, filed Oct. 14, 2004 by Laubinger for VEHICLE IMAGING SYSTEM; Ser. No. 60/731,183, filed Oct. 28, 2005 by Gibson for CAMERA MODULE FOR VEHICLE VISION SYSTEM; and/or Ser. No. 60/765,797, filed Feb. 7, 2006 by Briggance for CAMERA MOUNTED AT REAR OF VEHICLE, and/or International PCT Application No. PCT/US2006/041709, filed Oct. 27, 2006, and published May 10, 2007 as International Publication No. WO 07/053404, which are hereby incorporated herein by reference in their entireties. The mirror casing thus may support one or more rearward facing imaging sensors or cameras, such as for rearward vision or imaging systems, such as for a rear vision system or back up aid of the types described in U.S. Pat. Nos. 6,717,610 and/or 6,201,642 (which are hereby incorporated herein by reference in their entireties), and/or a cabin monitoring system or baby view system of the types described in U.S. Pat. No. 6,690,268 (which is hereby incorporated herein by reference in its entirety), and/or the like.

Optionally, the fixed mounting structure and/or mirror casing and/or windshield electronics module may house or support a display device, such as a heads up display device (such as the types described in U.S. patent applications, Ser. No. 11/105,757, filed Apr. 14, 2005; and Ser. No. 11/029,695, filed Jan. 5, 2005, now U.S. Pat. No. 7,253,723, which are hereby incorporated herein by reference in their entireties) that is operable to project a display at the area in front of the driver to enhance viewing of the display information without adversely affecting the driver's forward field of view. For example, the mirror casing may support a heads up display (HUD), such as a MicroHUD™ head-up display system available from MicroVision Inc. of Bothell, Wash., and/or such as a HUD that utilizes aspects described in U.S. patent applications, Ser. No. 11/105,757, filed Apr. 14, 2005; and Ser. No. 11/029,695, filed Jan. 5, 2005, now U.S. Pat. No. 7,253,723, which are hereby incorporated herein by reference in their entireties. For example, MicroVision's MicroHUD™ combines a MEMS-based micro display with an optical package of lenses and mirrors to achieve a compact high-performance HUD module that reflects a virtual image off the windscreen that appears to the driver to be close to the front of the car. This laser-scanning display can outperform many miniature flat panel LCD display screens because it can be clearly viewed in the brightest conditions and also dimmed to the very low brightness levels required for safe night-time driving. For example, such a display device may be located at or in the mirror casing/mounting structure/windshield electronics module and may be non-movably mounted at the mirror casing or mounting structure or windshield electronics module, and may be operable to project the display information at the windshield of the vehicle so as to be readily viewed by the driver of the vehicle in the driver's forward field of view.

The mounting structure and/or mirror casing and/or windshield electronics module may be fixedly attached to or supported at the vehicle windshield and may extend upward toward the headliner of the vehicle. Thus, the mirror assembly of the present invention may have enhanced wire management and may substantially conceal the wiring of the electronic components/accessories between the circuitry within the mirror casing and the headliner at the upper portion of the vehicle windshield. Optionally, the mirror assembly may include wire management elements, such as the types described in U.S. patent applications, Ser. No. 11/226,628, filed Sep. 14, 2005; and/or Ser. No. 11/584,697, filed Oct. 20, 2006; and/or U.S. provisional application, Ser. No. Ser. No. 60/729,430, filed Oct. 21, 2005, which are hereby incorporated herein by reference in their entireties, to conceal the wires extending between an upper portion of the mirror casing and the vehicle headliner (or overhead console); Optionally, the mirror casing and/or mounting structure and/or windshield electronics module may abut the headliner and/or may be an extension of an overhead console of the vehicle (such as by utilizing aspects described in U.S. patent application Ser. No. 10/538,724, filed Jun. 13, 2005 by Hutzel et al. for ACCESSORY SYSTEM FOR VEHICLE, and/or U.S. patent application Ser. No. 10/510,813, filed Aug. 23, 2002 by Berberich et al. for COVER MODULE, now U.S. Patent Application Publication No. US2005/0151396A1, published Jul. 14, 2005, which are hereby incorporated herein by reference in their entireties). The mirror assembly of the present invention thus may allow for utilization of the area above the mirror reflective element for additional mirror content, such as additional electronic accessories or circuitry, and thus may provide for or accommodate additional mirror content/circuitry and/or vehicle content/circuitry.

Optionally, the mirror assembly and/or reflective element assembly may include one or more displays, such as for the accessories or circuitry described herein. The displays may comprise any suitable display, such as displays of the types described in U.S. Pat. Nos. 5,530,240 and/or 6,329,925, which are hereby incorporated herein by reference in their entireties, or may be display-on-demand or transflective type displays or other displays, such as the types described in U.S. Pat. Nos. 6,690,268; 5,668,663 and/or 5,724,187, and/or U.S. patent applications, Ser. No. 10/054,633, filed Jan. 22, 2002 by Lynam et al. for VEHICULAR LIGHTING SYSTEM, now U.S. Pat. No. 7,195,381; Ser. No. 11/021,065, filed Dec. 23, 2004 by McCabe et al. for ELECTRO-OPTIC MIRROR CELL, now U.S. Pat. No. 7,255,451; Ser. No. 10/528,269, filed Mar. 17, 2005, now U.S. Pat. No. 7,274,501; Ser. No. 10/533,762, filed May 4, 2005, now U.S. Pat. No. 7,184,190; Ser. No. 10/538,724, filed Jun. 13, 2005 by Hutzel et al. for ACCESSORY SYSTEM FOR VEHICLE; Ser. No. 11/226,628, filed Sep. 14, 2005 by Karner et al.; Ser. No. 10/993,302, filed Nov. 19, 2004; and/or Ser. No. 11/284,543, filed Nov. 22, 2005, and/or PCT Patent Application No. PCT/US2006/018567, filed May 15, 2006 by Donnelly Corp. et al., and published Nov. 23, 2006 as International Publication No. WO 2006/124682; and/or PCT Application No. PCT/US2006/042718, filed Oct. 31, 2006, and published May 10, 2007 as International Publication No. WO 07/053710; and/or U.S.

provisional applications, Ser. No. 60/836,219, filed Aug. 8, 2006 by Weller et al. for INTERIOR REARVIEW MIRROR ASSEMBLY WITH DISPLAY; Ser. No. 60/759,992, filed Jan. 18, 2006; and Ser. No. 60/732,245, filed Nov. 1, 2005, and/or PCT Application No. PCT/US03/40611, filed Dec. 19, 2003 by Donnelly Corp. et al. for ACCESSORY SYSTEM FOR VEHICLE, and published Jul. 15, 2004 as International Publication No. WO 2004/058540, which are all hereby incorporated herein by reference in their entireties, or may include or incorporate video displays or the like, such as the types described in U.S. Pat. No. 6,690,268 and/or PCT Application No. PCT/US03/40611, filed Dec. 19, 2003 by Donnelly Corp. et al. for ACCESSORY SYSTEM FOR VEHICLE, and published Jul. 15, 2004 as International Publication No. WO 2004/058540, U.S. patent applications, Ser. No. 10/538,724, filed Jun. 13, 2005; and/or Ser. No. 11/284,543, filed Nov. 22, 2005, which are hereby incorporated herein by reference in their entireties. Optionally, the mirror assembly may include a video display that is selectively positionable, such as extendable/retractable or pivotable or foldable so as to be selectively positioned at a side or below the mirror casing when in use and storable within or at least partially within the mirror casing when not in use. The display may automatically extend/pivot to the in-use position in response to an actuating event, such as when the vehicle is shifted into its reverse gear for a rear vision system or back up aid.

Such a video mirror display (or other display) may be associated with a rearward facing camera at a rear of the vehicle and having a rearward field of view, such as at the license plate holder of the vehicle or at a rear trim portion (such as described in U.S. patent application Ser. No. 11/672,070, filed Feb. 7, 2007, and U.S. provisional application Ser. No. 60/765,797, filed Feb. 7, 2006, which is hereby incorporated herein by reference in its entirety). The image data captured by the rearward facing camera may be communicated to the control or video display at the rearview mirror assembly (or elsewhere in the vehicle, such as at an overhead console or accessory module or the like) via any suitable communication means or protocol. For example, the image data may be communicated via a fiber optic cable or a twisted pair of wires, or may be communicated wirelessly, such as via a BLUETOOTH® communication link or protocol or the like, or may be superimposed on a power line, such as a 12 volt power line of the vehicle, such as by utilizing aspects of the systems described in U.S. patent application Ser. No. 11/239,980, filed Sep. 30, 2005 by Camilleri et al. for VISION SYSTEM FOR VEHICLE, which is hereby incorporated herein by reference in its entirety.

Optionally, the mirror assembly may include one or more user inputs for controlling or activating/deactivating one or more electrical accessories or devices of or associated with the mirror assembly. For example, the mirror assembly may comprise any type of switches or buttons, such as touch or proximity sensing switches, such as touch or proximity switches of the types described in PCT Application No. PCT/US03/40611, filed Dec. 19, 2003 by Donnelly Corporation for ACCESSORY SYSTEM FOR VEHICLE, and published Jul. 15, 2004 as International Publication No. WO 2004/058540; and/or PCT Application No. PCT/US2004/015424, filed May 18, 2004 by Donnelly Corp. et al. for MIRROR ASSEMBLY FOR VEHICLE, and published Dec. 2, 2004 as International Publication No. WO 2004/103772, and/or U.S. Pat. Nos. 6,001,486; 6,310,611; 6,320,282; and 6,627,918; and/or U.S. patent application Ser. No. 11/021,065, filed Dec. 23, 2004, now U.S. Pat. No. 7,255,451; and/or U.S. patent applications, Ser. No. 09/817,874, filed Mar. 26, 2001 by Quist et al. for INTERACTIVE AUTOMOTIVE REARVISION SYSTEM, now U.S. Pat. No. 7,224,324; Ser. No. 10/956,749, filed Oct. 1, 2004 by Schofield et al. for MIRROR REFLECTIVE ELEMENT ASSEMBLY INCLUDING ELECTRONIC COMPONENT; Ser. No. 10/933,842, filed Sep. 3, 2004 by Kulas et al. for INTERIOR REARVIEW MIRROR ASSEMBLY, now U.S. Pat. No. 7,249,860; Ser. No. 11/021,065, filed Dec. 23, 2004, now U.S. Pat. No. 7,255,451; and/or Ser. No. 11/140,396, filed May 27, 2005, which are hereby incorporated herein by reference in their entireties, or the inputs may comprise other types of buttons or switches, such as those described in U.S. Pat. No. 6,501,387, and/or U.S. patent applications, Ser. No. 11/029,695, filed Jan. 5, 2005, now U.S. Pat. No. 7,253,723; and/or Ser. No. 11/451,639, filed Jun. 13, 2006 by Uken for MIRROR ASSEMBLY FOR VEHICLE, which are hereby incorporated herein by reference in their entireties, or such as fabric-made position detectors, such as those described in U.S. Pat. Nos. 6,504,531; 6,501,465; 6,492,980; 6,452,479; 6,437,258; and 6,369,804, which are hereby incorporated herein by reference in their entireties. Other types of switches or buttons or inputs or sensors may be incorporated to provide the desired function, without affecting the scope of the present invention. The manual inputs or user actuatable inputs or actuators may control or adjust or activate/deactivate one or more accessories or elements or features. For touch sensitive inputs or applications or switches, the mirror assembly or accessory module or input may, when activated, provide a positive feedback (such as activation of an illumination source or the like, or such as via an audible signal, such as a chime or the like, or a tactile or haptic signal, or a rumble device or signal or the like) to the user so that the user is made aware that the input was successfully activated.

Optionally, the user inputs or buttons may comprise user inputs for a garage door opening system, such as a vehicle based garage door opening system of the types described in U.S. Pat. Nos. 7,023,322; 6,396,408; 6,362,771; and 5,798,688, which are hereby incorporated herein by reference in their entireties. The user inputs may also or otherwise function to activate and deactivate a display or function or accessory, and/or may activate/deactivate and/or commence a calibration of a compass system of the mirror assembly and/or vehicle. Optionally, the user inputs may also or otherwise comprise user inputs for a telematics system of the vehicle, such as, for example, an ONSTAR® system as found in General Motors vehicles and/or such as described in U.S. Pat. Nos. 4,862,594; 4,937,945; 5,131,154; 5,255,442; 5,632,092; 5,798,688; 5,971,552; 5,924,212; 6,243,003; 6,278,377; 6,420,975; 6,946,978; 6,477,464; 6,678,614; and/or 7,004,593, and/or U.S. patent applications, Ser. No. 10/645,762, filed Aug. 20, 2003 by Taylor et al. for VEHICLE NAVIGATION SYSTEM FOR USE WITH A TELEMATICS SYSTEM, now U.S. Pat. No. 7,167,796; Ser. No. 10/529,715, filed Mar. 30, 2005 by Larson et al. for MICROPHONE SYSTEM FOR VEHICLE; Ser. No. 10/538,724, filed Jun. 13, 2005 by Hutzel et al. for ACCESSORY SYSTEM FOR VEHICLE; and/or Ser. No. 10/964,512, filed Oct. 13, 2004, now U.S. Pat. No. 7,308,341, which are all hereby incorporated herein by reference in their entireties.

Optionally, the display and inputs may be associated with various accessories or systems, such as, for example, a tire pressure monitoring system or a passenger air bag status or a garage door opening system or a telematics system or any other accessory or system of the mirror assembly or of the vehicle or of an accessory module or console of the vehicle, such as an accessory module or console of the types described in U.S. Pat. Nos. 6,877,888; 6,690,268; 6,824,281; 6,672,

744; 6,386,742; and 6,124,886, and/or PCT Application No. PCT/US03/40611, filed Dec. 19, 2003 by Donnelly Corporation for ACCESSORY SYSTEM FOR VEHICLE, and published Jul. 15, 2004 as International Publication No. WO 2004/058540, and/or PCT Application No. PCT/US04/15424, filed May 18, 2004 by Donnelly Corporation et al. for MIRROR ASSEMBLY FOR VEHICLE, and published Dec. 2, 2004 as International Publication No. WO 2004/103772, and/or U.S. patent application Ser. No. 10/510,813, filed Aug. 23, 2002 by Berberich et al. for COVER MODULE, now U.S. Patent Application Publication No. US2005/0151396A1, published Jul. 14, 2005, which are hereby incorporated herein by reference in their entireties.

Optionally, the mirror assembly or accessory module may fixedly or non-movably support one or more other accessories or features, such as one or more electrical or electronic devices or accessories. For example, illumination sources or lights, such as map reading lights or one or more other lights or illumination sources, such as illumination sources of the types disclosed in U.S. Pat. Nos. 6,690,268; 5,938,321; 5,813,745; 5,820,245; 5,673,994; 5,649,756; 5,178,448; 5,671,996; 4,646,210; 4,733,336; 4,807,096; 6,042,253; 6,971,775; and/or 5,669,698, and/or U.S. patent applications, Ser. No. 10/054,633, filed Jan. 22, 2002, now U.S. Pat. No. 7,195,381; and/or Ser. No. 10/933,842, filed Sep. 3, 2004 by Kulas et al. for INTERIOR REARVIEW MIRROR ASSEMBLY, now U.S. Pat. No. 7,249,860, which are hereby incorporated herein by reference in their entireties, may be included in the mirror assembly. The illumination sources and/or the circuit board may be connected to one or more buttons or inputs for activating and deactivating the illumination sources.

Optionally, the mirror assembly may also or otherwise include other accessories, such as microphones, such as analog microphones or digital microphones or the like, such as microphones of the types disclosed in U.S. Pat. Nos. 6,243,003; 6,278,377; and/or 6,420,975, and/or in U.S. patent application Ser. No. 10/529,715, filed Mar. 30, 2005 by Larson et al. for MICROPHONE SYSTEM FOR VEHICLE. Optionally, the mirror assembly may also or otherwise include other accessories, such as a telematics system, speakers, antennas, including global positioning system (GPS) or cellular phone antennas, such as disclosed in U.S. Pat. No. 5,971,552, a communication module, such as disclosed in U.S. Pat. No. 5,798,688, a voice recorder, a blind spot detection and/or indication system, such as disclosed in U.S. Pat. Nos. 7,038,577; 6,882,287; 5,929,786 and/or 5,786,772, and/or U.S. patent application, Ser. No. 11/315,675, filed Dec. 22, 2005 by Higgins-Luthman for OBJECT DETECTION SYSTEM FOR VEHICLE; and/or PCT Application No. PCT/US2006/026148, filed Jul. 5, 2006 for VEHICLE EXTERIOR MIRROR ASSEMBLY WITH BLIND SPOT INDICATOR, and published Jan. 11, 2007 as International Publication No. WO 2007/005942, transmitters and/or receivers, such as for a garage door opener or a vehicle door unlocking system or the like (such as a remote keyless entry system), a digital network, such as described in U.S. Pat. No. 5,798,575, a hands-free phone attachment, an imaging system or components or circuitry or display thereof, such as an imaging and/or display system of the types described in U.S. Pat. Nos. 6,690,268 and 6,847,487; and/or U.S. provisional applications, Ser. No. 60/614,644, filed Sep. 30, 2004 ; Ser. No. 60/618,686, filed Oct. 14, 2004; and/or Ser. No. 60/628,709, filed Nov. 17, 2004; and/or U.S. pat. applications, Ser. No. 11/105,757, filed Apr. 14, 2005; Ser. No. 11/334,139, filed Jan. 18, 2006; and/or Ser. No. 11/239,980, filed Sep. 30, 2005, a video device for internal cabin surveillance (such as for sleep detection or driver drowsiness detection or the like) and/or video telephone function, such as disclosed in U.S. Pat. Nos. 5,760,962 and/or 5,877,897, an occupant detection system and/or interior cabin monitoring system (such as the types described in U.S. Pat. Nos. 6,019,411 and/or 6,690,268, and/or PCT Application No. PCT/US2005/042504, filed Nov. 22, 2005 and published Jun. 1, 2006 as International Publication No. WO 2006/058098 A2; and/or PCT Application No. PCT/US94/01954, filed Feb. 25, 1994, a heating element, particularly for an exterior mirror application, such as the types described in U.S. patent application Ser. No. 11/334,139, filed Jan. 18, 2006, a remote keyless entry receiver, a seat occupancy detector, a remote starter control, a yaw sensor, a clock, a carbon monoxide detector, status displays, such as displays that display a status of a door of the vehicle, a transmission selection (4wd/2wd or traction control (TCS) or the like), an antilock braking system, a road condition (that may warn the driver of icy road conditions) and/or the like, a trip computer, a tire pressure monitoring system (TPMS) receiver (such as described in U.S. Pat. Nos. 6,124,647; 6,294,989; 6,445,287; 6,472,979; and/or 6,731,205; and/or U.S. patent application Ser. No. 11/232,324, filed Sep. 21, 2005 by O'Brien et al. for TIRE PRESSURE ALERT SYSTEM, and/or an ONSTAR® system and/or any other accessory or circuitry or the like (with all of the above-referenced U.S. patents and PCT applications and U.S. patent applications and U.S. provisional applications being commonly assigned to Donnelly Corporation, and with the disclosures of the referenced U.S. patents and PCT applications and U.S. patent applications and U.S. provisional applications being hereby incorporated herein by reference in their entireties).

Changes and modifications to the specifically described embodiments may be carried out without departing from the principles of the present invention, which is intended to be limited only by the scope of the appended claims as interpreted according to the principles of patent law.

The invention claimed is:

1. A forward facing sensing system for a vehicle, the vehicle having a windshield, said forward facing sensing system comprising:

a radar sensor operable to detect an object ahead of the vehicle;

a forward facing image sensor having a forward field of view in a direction of forward travel of the vehicle;

wherein both said radar sensor and said image sensor are disposed behind or adjacent to an upper region of the vehicle windshield;

a control responsive to said radar sensor and responsive to said forward facing image sensor;

wherein said control at least one of (a) enhances detection of an object ahead of the vehicle by said radar sensor responsive to said forward facing image sensor and (b) enhances detection of an object ahead of the vehicle by said forward facing image sensor responsive to said radar sensor; and

wherein said radar sensor comprises a silicon germanium radar sensor.

2. The sensing system of claim **1**, wherein said radar sensor is disposed adjacent to an upper region of the vehicle windshield and wherein said radar sensor is disposed at a pocket established at the upper region of the vehicle windshield and wherein transmission of and receipt of radar frequency electromagnetic radiation by said radar sensor is not through the windshield.

3. The sensing system of claim **2** further comprising a cover substantially sealed at the vehicle windshield at or near the upper region of the vehicle windshield, and wherein said

radar sensor transmits and receives radar frequency electromagnetic radiation through said cover.

4. The sensing system of claim **3**, wherein said cover comprises a material that is substantially transmissive to radar frequency electromagnetic radiation.

5. The sensing system of claim **4**, wherein said radar sensor emits radar frequency electromagnetic radiation that transmit through said cover and forward of the equipped vehicle in the direction of forward travel of the equipped vehicle as the equipped vehicle travels along a road.

6. The sensing system of claim **4**, wherein said cover comprises a polymeric cover panel.

7. The sensing system of claim **4**, wherein said cover is configured to substantially match at least one of (a) a shade band along the upper region of the windshield, (b) a windshield electronics module of the vehicle, (c) an interior component of the vehicle, and (d) an exterior component of the vehicle.

8. The sensing system of claim **1**, wherein said forward facing image sensor is disposed to the rear of the windshield and has a forward field of view through the windshield.

9. The sensing system of claim **8**, wherein said control enhances detection of an object ahead of the vehicle by said radar sensor responsive to said forward facing image sensor.

10. The sensing system of claim **9**, wherein said control enhances detection of the object ahead of the vehicle by said radar sensor via at least one of (a) beam aiming and (b) beam selection.

11. The sensing system of claim **9**, wherein said radar sensor comprises at least one of (a) digital beam forming and (b) digital beam steering.

12. The sensing system of claim **9**, wherein said radar sensor comprises at least one of (a) an array antenna and (b) a phased array antenna.

13. The sensing system of claim **1**, wherein said control enhances detection of an object ahead of the vehicle by said forward facing image sensor responsive to said radar sensor.

14. The sensing system of claim **13**, wherein said control enhances detection of the object ahead of the vehicle by said forward facing image sensor via algorithmic processing of a portion of an image captured by said forward facing image sensor.

15. The sensing system of claim **14**, wherein said portion of an image captured by said forward facing image sensor is spatially related to a location of a detected object in the forward field of view of said image sensor.

16. The sensing system of claim **13**, wherein said control enhances detection of the object ahead of the vehicle by said forward facing image sensor via at least one of (a) directing the forward field of view of said image sensor, (b) a zoom function and (c) image processing of captured image data.

17. The sensing system of claim **1**, wherein said forward facing image sensor and said radar sensor are commonly established on a common substrate.

18. The sensing system of claim **1**, wherein said radar sensor utilizes an array antenna.

19. The sensing system of claim **1**, wherein said control at least in part controls an adaptive cruise control system of the vehicle.

20. A forward facing sensing system for a vehicle, the vehicle having a windshield, said forward facing sensing system comprising:

a radar sensor operable to detect an object ahead of the vehicle;

a forward facing image sensor having a forward field of view in a direction of forward travel of the vehicle;

a control responsive to said radar sensor and responsive to said forward facing image sensor;

wherein said control at least one of (a) enhances detection of an object ahead of the vehicle by said radar sensor responsive to said forward facing image sensor and (b) enhances detection of an object ahead of the vehicle by said forward facing image sensor responsive to said radar sensor;

wherein said radar sensor comprises a silicon germanium radar sensor;

wherein said radar sensor comprises at least one of (a) digital beam forming and (b) digital beam steering; and

wherein said radar sensor comprises at least one of (a) an array antenna and (b) a phased array antenna.

21. The sensing system of claim **20**, wherein both said radar sensor and said image sensor are disposed behind or adjacent to an upper region of the vehicle windshield.

22. The sensing system of claim **20**, wherein said control enhances detection of the object ahead of the vehicle by said radar sensor via at least one of (a) beam aiming and (b) beam selection.

23. The sensing system of claim **20**, wherein said control at least in part controls an adaptive cruise control system of the vehicle.

24. A forward facing sensing system for a vehicle, the vehicle having a windshield, said forward facing sensing system comprising:

a radar sensor operable to detect an object ahead of the vehicle;

a forward facing image sensor having a forward field of view in a direction of forward travel of the vehicle;

wherein said forward facing image sensor is disposed to the rear of the windshield and has a forward field of view through the windshield;

a control responsive to said radar sensor and responsive to said forward facing image sensor;

wherein said control at least one of (a) enhances detection of an object ahead of the vehicle by said radar sensor responsive to said forward facing image sensor and (b) enhances detection of an object ahead of the vehicle by said forward facing image sensor responsive to said radar sensor;

wherein said radar sensor comprises a silicon germanium radar sensor;

wherein said radar sensor comprises at least one of (a) an array antenna and (b) a phased array antenna;

wherein said control enhances detection of an object ahead of the vehicle by said forward facing image sensor responsive to said radar sensor;

wherein said control enhances detection of the object ahead of the vehicle by said forward facing image sensor via algorithmic processing of a portion of an image captured by said forward facing image sensor; and

wherein said portion of an image captured by said forward facing image sensor is spatially related to a location of a detected object in the forward field of view of said image sensor.

25. The sensing system of claim **24**, wherein said radar sensor comprises at least one of (a) digital beam forming and (b) digital beam steering.

26. The sensing system of claim **24**, wherein said control at least in part controls an adaptive cruise control system of the vehicle.

27. A forward facing sensing system for a vehicle, the vehicle having a windshield, said forward facing sensing system comprising:

a radar sensor operable to detect an object ahead of the vehicle;

a forward facing image sensor having a forward field of view in a direction of forward travel of the vehicle;

wherein said forward facing image sensor is disposed to the rear of the windshield and has a forward field of view through the windshield;

a control responsive to said radar sensor and responsive to said forward facing image sensor;

wherein said control at least one of (a) enhances detection of an object ahead of the vehicle by said radar sensor responsive to said forward facing image sensor and (b) enhances detection of an object ahead of the vehicle by said forward facing image sensor responsive to said radar sensor;

wherein said radar sensor comprises a silicon germanium radar sensor; and

wherein said control at least in part controls an adaptive cruise control system of the vehicle.

28. The sensing system of claim **27**, wherein said radar sensor utilizes an array antenna.

29. The sensing system of claim **28**, wherein said radar sensor comprises at least one of (a) digital beam forming and (b) digital beam steering.

30. The sensing system of claim **29**, wherein said radar sensor is disposed adjacent to an upper region of the vehicle windshield and wherein said radar sensor is disposed at a pocket established at the upper region of the vehicle windshield and wherein transmission of and receipt of radar frequency electromagnetic radiation by said radar sensor is not through the windshield.

31. A forward facing sensing system for a vehicle, the vehicle having a windshield, said forward facing sensing system comprising:

a radar sensor operable to detect an object ahead of the vehicle;

a forward facing image sensor having a forward field of view in a direction of forward travel of the vehicle;

wherein said forward facing image sensor is disposed to the rear of the windshield and has a forward field of view through the windshield;

a control responsive to said radar sensor and responsive to said forward facing image sensor;

wherein said radar sensor comprises a silicon germanium radar sensor;

wherein said control enhances detection of the object ahead of the vehicle by said forward facing image sensor via algorithmic processing of a portion of an image captured by said forward facing image sensor; and

wherein said portion of an image captured by said forward facing image sensor is spatially related to a location of a detected object in the forward field of view of said image sensor.

32. The sensing system of claim **31**, wherein said radar sensor utilizes an array antenna.

33. The sensing system of claim **32**, wherein said radar sensor comprises at least one of (a) digital beam forming and (b) digital beam steering.

34. The sensing system of claim **33**, wherein said control at least in part controls an adaptive cruise control system of the vehicle.

35. The sensing system of claim **34**, wherein said radar sensor is disposed adjacent to an upper region of the vehicle windshield and wherein said radar sensor is disposed at a pocket established at the upper region of the vehicle windshield and wherein transmission of and receipt of radar frequency electromagnetic radiation by said radar sensor is not through the windshield.

* * * * *