US008190162B2

(12) **United States Patent**
Hansen

(10) **Patent No.: US 8,190,162 B2**
(45) **Date of Patent: May 29, 2012**

(54) **RADAR DETECTION CIRCUIT FOR A WLAN TRANSCEIVER**

(75) Inventor: **Christopher J. Hansen**, Sunnyvale, CA (US)

(73) Assignee: **Broadcom Corporation**, Irvine, CA (US)

(*) Notice: Subject to any disclaimer, the term of this patent is extended or adjusted under 35 U.S.C. 154(b) by 1270 days.

(21) Appl. No.: **11/415,841**

(22) Filed: **May 2, 2006**

(65) **Prior Publication Data**

US 2006/0199587 A1 Sep. 7, 2006

Related U.S. Application Data

(63) Continuation-in-part of application No. 10/815,163, filed on Mar. 31, 2004, and a continuation-in-part of application No. 10/815,161, filed on Mar. 31, 2004.

(60) Provisional application No. 60/735,521, filed on Nov. 11, 2005, provisional application No. 60/502,934, filed on Sep. 15, 2003.

(51) **Int. Cl.**
H04Q 7/20 (2006.01)

(52) **U.S. Cl.** **455/442**; 342/29; 342/70; 342/131; 342/204; 375/342

(58) **Field of Classification Search** 455/442
See application file for complete search history.

(56) **References Cited**

U.S. PATENT DOCUMENTS

3,660,844	A *	5/1972	Potter	342/20
4,134,114	A *	1/1979	Riggs et al.	342/201
4,181,910	A *	1/1980	Hitterdal	342/20
4,216,474	A *	8/1980	Levine	342/201
4,217,827	A *	8/1980	Dent	102/214
4,315,261	A *	2/1982	Mosher	342/20
4,566,010	A *	1/1986	Collins	342/201
4,682,173	A *	7/1987	Kotoh et al.	342/51
4,740,045	A *	4/1988	Goodson et al.	342/112
H1005	H *	12/1991	Gerlach	342/378
5,150,124	A *	9/1992	Moore et al.	342/68
5,473,332	A *	12/1995	James et al.	342/159
5,604,503	A *	2/1997	Fowler et al.	342/378
5,657,326	A *	8/1997	Burns et al.	370/349
5,990,833	A *	11/1999	Ahlbom et al.	342/417

(Continued)

FOREIGN PATENT DOCUMENTS

GB 2249448 A * 5/1992

(Continued)

Primary Examiner — Yuwen Pan
Assistant Examiner — Hai V Nguyen
(74) *Attorney, Agent, or Firm* — Garlick & Markison; James A. Harrison; Jessica W. Smith

(57) **ABSTRACT**

A single chip radio transceiver includes circuitry that enables detection of radar signals to enable the radio transceiver to halt communications in overlapping communication bands to avoid interference with the radar transmitting the radar pulses. The radio transceiver is operable to evaluate a number of most and second most common pulse interval values to determine whether a traditional radar signal is present. The radio transceiver also is operable to FM demodulate and incoming signal to determine whether a non-traditional radar signal such as a bin-5 radar signal is present. After FM demodulation, the signal is averaged wherein a substantially large value is produced for non-traditional radar signals and a value approximately equal to zero is produced for a communication signal that is not FM modulated with a continuously increasing frequency signal. Gain control is used to limit incoming signal magnitude to a specified range of magnitudes.

32 Claims, 16 Drawing Sheets

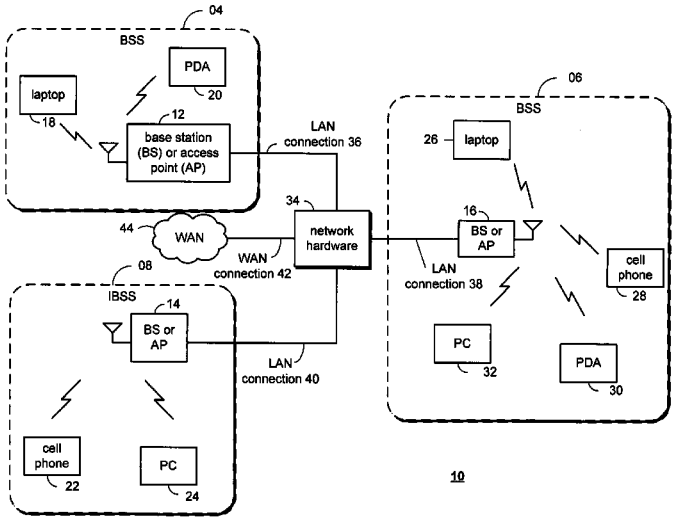

U.S. PATENT DOCUMENTS

6,351,502	B1 *	2/2002	Zargari	375/324
6,522,295	B2 *	2/2003	Baugh et al.	342/453
6,587,072	B1 *	7/2003	Gresham et al.	342/70
6,697,013	B2 *	2/2004	McFarland et al.	342/159
6,703,968	B2 *	3/2004	Baugh	342/125
6,710,743	B2 *	3/2004	Benner et al.	342/453
6,714,605	B2 *	3/2004	Sugar et al.	375/340
6,721,547	B2 *	4/2004	Husted et al.	455/226.1
6,738,021	B2 *	5/2004	Benner et al.	342/451
6,791,489	B1 *	9/2004	Richardson et al.	342/43
6,798,381	B2 *	9/2004	Benner et al.	342/451
6,801,163	B2 *	10/2004	Baugh et al.	342/451
6,831,589	B2 *	12/2004	Shearer, III	342/20
6,839,026	B2 *	1/2005	Baugh et al.	342/451
6,870,815	B2 *	3/2005	McFarland et al.	370/250
6,879,281	B2 *	4/2005	Gresham et al.	342/70
6,891,496	B2 *	5/2005	Husted et al.	342/57
6,930,638	B2 *	8/2005	Lloyd et al.	342/453
6,954,171	B2 *	10/2005	Husted et al.	342/57
7,012,552	B2 *	3/2006	Baugh et al.	340/945
7,019,692	B2 *	3/2006	Baugh et al.	342/378
7,024,188	B2 *	4/2006	Khun-Jush et al.	455/423
7,027,530	B2 *	4/2006	McFarland et al.	375/341
7,079,812	B2 *	7/2006	Miller et al.	455/63.1
7,099,627	B2 *	8/2006	Turner et al.	455/67.11
7,116,943	B2 *	10/2006	Sugar et al.	455/67.11
7,129,884	B1 *	10/2006	Tehrani et al.	342/20
7,148,840	B2 *	12/2006	Dooi et al.	342/131
7,154,599	B2 *	12/2006	Adams et al.	356/317
7,155,230	B2 *	12/2006	Tsien	455/450
7,171,161	B2 *	1/2007	Miller	455/67.11
7,254,191	B2 *	8/2007	Sugar et al.	375/340
7,269,151	B2 *	9/2007	Diener et al.	370/329
7,289,056	B2 *	10/2007	Liu et al.	342/52
7,292,656	B2 *	11/2007	Kloper et al.	375/340
7,292,711	B2 *	11/2007	Kiraly et al.	382/103
7,376,878	B2 *	5/2008	Kleewein et al.	714/746
7,386,063	B1 *	6/2008	Husted	375/316
7,391,819	B1 *	6/2008	von der Embse	375/295
7,408,907	B2 *	8/2008	Diener	370/338
7,414,572	B2 *	8/2008	D'Amico et al.	342/159
7,424,268	B2 *	9/2008	Diener et al.	455/62
7,424,269	B2 *	9/2008	Trainin et al.	455/67.13
7,436,352	B2 *	10/2008	Theobold et al.	342/159
7,480,324	B2 *	1/2009	Aiello et al.	375/130
7,496,368	B2 *	2/2009	Zimmermann et al.	455/455
7,545,308	B2 *	6/2009	Mitsugi	342/52
7,570,193	B2 *	8/2009	Bagge	342/20
7,593,692	B2 *	9/2009	Hansen et al.	455/67.11
7,606,193	B2 *	10/2009	McFarland et al.	370/329
7,606,335	B2 *	10/2009	Kloper et al.	375/340
7,701,382	B2 *	4/2010	Hansen	342/52
7,702,291	B2 *	4/2010	Hansen	455/73
7,792,224	B2 *	9/2010	Meixner et al.	375/346
7,986,966	B2 *	7/2011	Sekiya et al.	455/552.1
7,990,904	B2 *	8/2011	Proctor et al.	370/315
2002/0075181	A1 *	6/2002	Kanechika et al.	342/175
2002/0126058	A1 *	9/2002	Schantz	343/741
2002/0198650	A1 *	12/2002	Baugh et al.	701/207
2003/0020653	A1 *	1/2003	Baugh et al.	342/451
2003/0036374	A1 *	2/2003	English et al.	455/403
2003/0107512	A1 *	6/2003	McFarland et al.	342/159
2003/0134664	A1 *	7/2003	Zancewicz	455/562
2003/0198200	A1 *	10/2003	Diener et al.	370/329
2003/0206130	A1 *	11/2003	Husted et al.	342/57
2003/0214430	A1 *	11/2003	Husted et al.	342/57
2004/0013128	A1 *	1/2004	Moreton et al.	370/447
2004/0028003	A1 *	2/2004	Diener et al.	370/319
2004/0047324	A1 *	3/2004	Diener	370/338
2004/0125835	A1 *	7/2004	Halmos	372/26
2004/0137849	A1 *	7/2004	Kloper et al.	455/67.11
2004/0201517	A1 *	10/2004	MacFarlane Shearer, III	342/159
2004/0203474	A1 *	10/2004	Miller et al.	455/69
2004/0219885	A1 *	11/2004	Sugar et al.	455/67.11
2004/0233102	A1 *	11/2004	Baugh et al.	342/378
2004/0246177	A1 *	12/2004	Lloyd et al.	342/453
2005/0002473	A1 *	1/2005	Kloper et al.	375/316
2005/0032479	A1 *	2/2005	Miller et al.	455/67.11
2005/0059363	A1 *	3/2005	Hansen	455/127.4
2005/0059364	A1 *	3/2005	Hansen et al.	455/127.4
2005/0162304	A1 *	7/2005	Mitsugi	342/57
2006/0098592	A1 *	5/2006	Proctor Jr. et al.	370/315
2006/0199587	A1 *	9/2006	Hansen	455/442
2007/0008214	A1 *	1/2007	Wasiewicz	342/159
2007/0264939	A1 *	11/2007	Sugar	455/67.11
2008/0019464	A1 *	1/2008	Kloper et al.	375/340
2009/0046625	A1 *	2/2009	Diener et al.	370/319

FOREIGN PATENT DOCUMENTS

WO	03050560	A1	6/2003

* cited by examiner

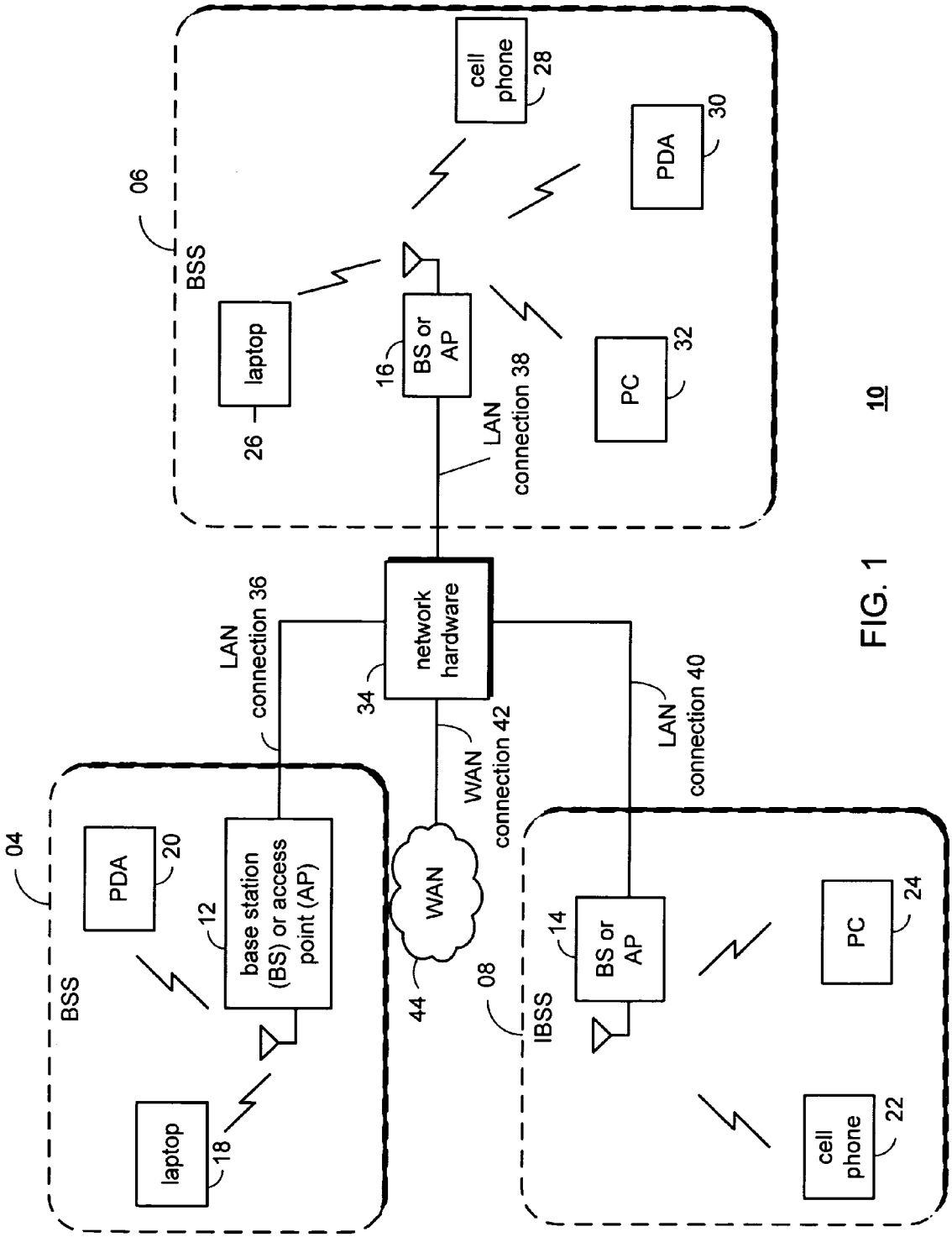
06
BSS
cell phone
28
PDA
30
laptop
26
16
BS or AP
LAN connection 38
PC
32
10
network hardware
34
LAN connection 36
LAN connection 40
WAN connection 42
WAN
44
04
BSS
PDA
20
base station (BS) or access point (AP)
12
laptop
18
08
IBSS
BS or AP
14
PC
24
cell phone
22

FIG. 1

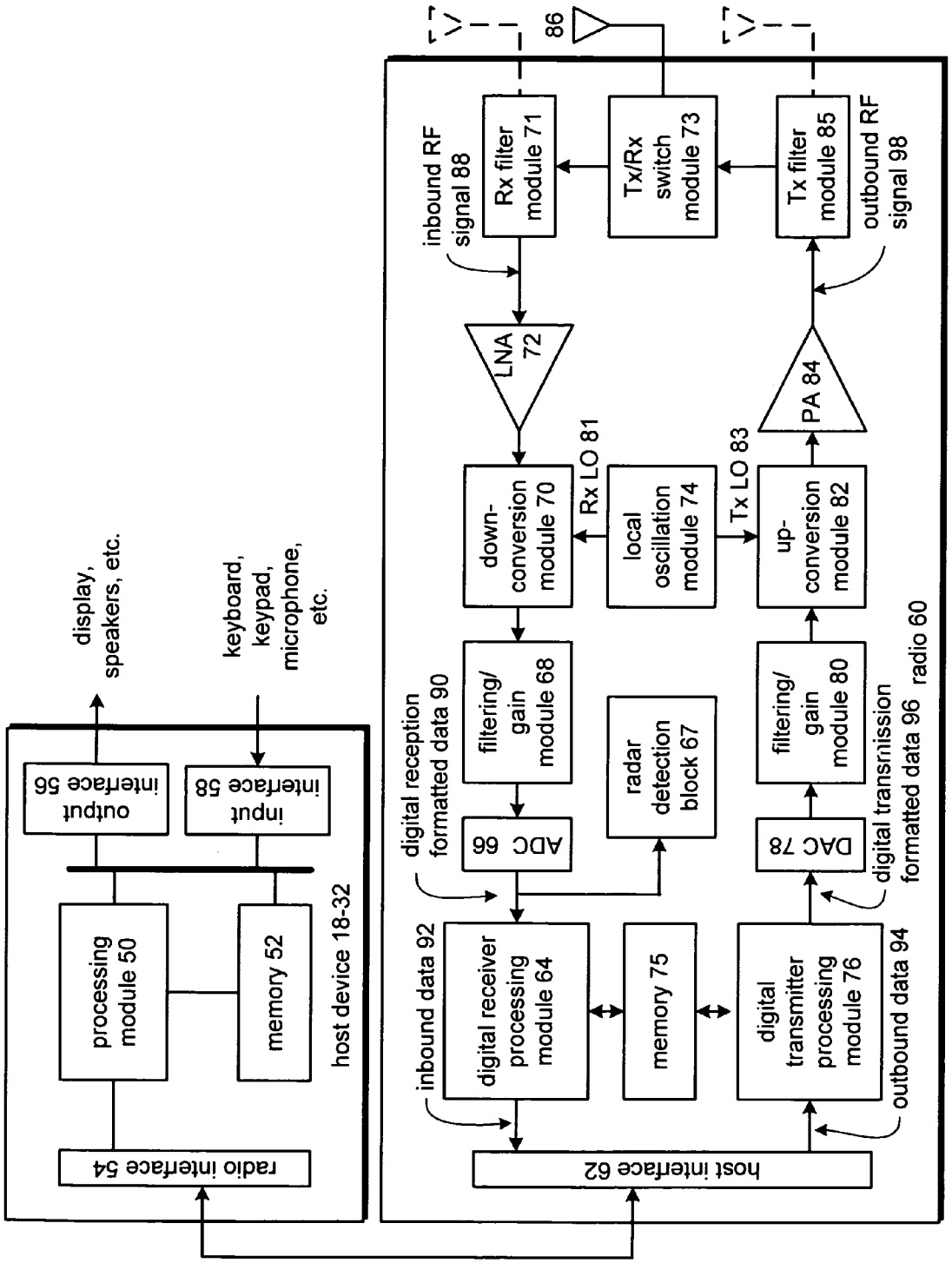
display, speakers, etc.
keyboard, keypad, microphone, etc.
output interface 56
input interface 58
processing module 50
memory 52
host device 18-32
radio interface 54
host interface 62
digital receiver processing module 64
memory 75
digital transmitter processing module 76
inbound data 92
outbound data 94
digital reception formatted data 90
digital transmission formatted data 96
radio 60
ADC 66
DAC 78
filtering/ gain module 68
filtering/ gain module 80
radar detection block 67
down-conversion module 70
up-conversion module 82
local oscillation module 74
Rx LO 81
Tx LO 83
LNA 72
PA 84
Rx filter module 71
Tx filter module 85
Tx/Rx switch module 73
inbound RF signal 88
outbound RF signal 98
86

FIG. 2

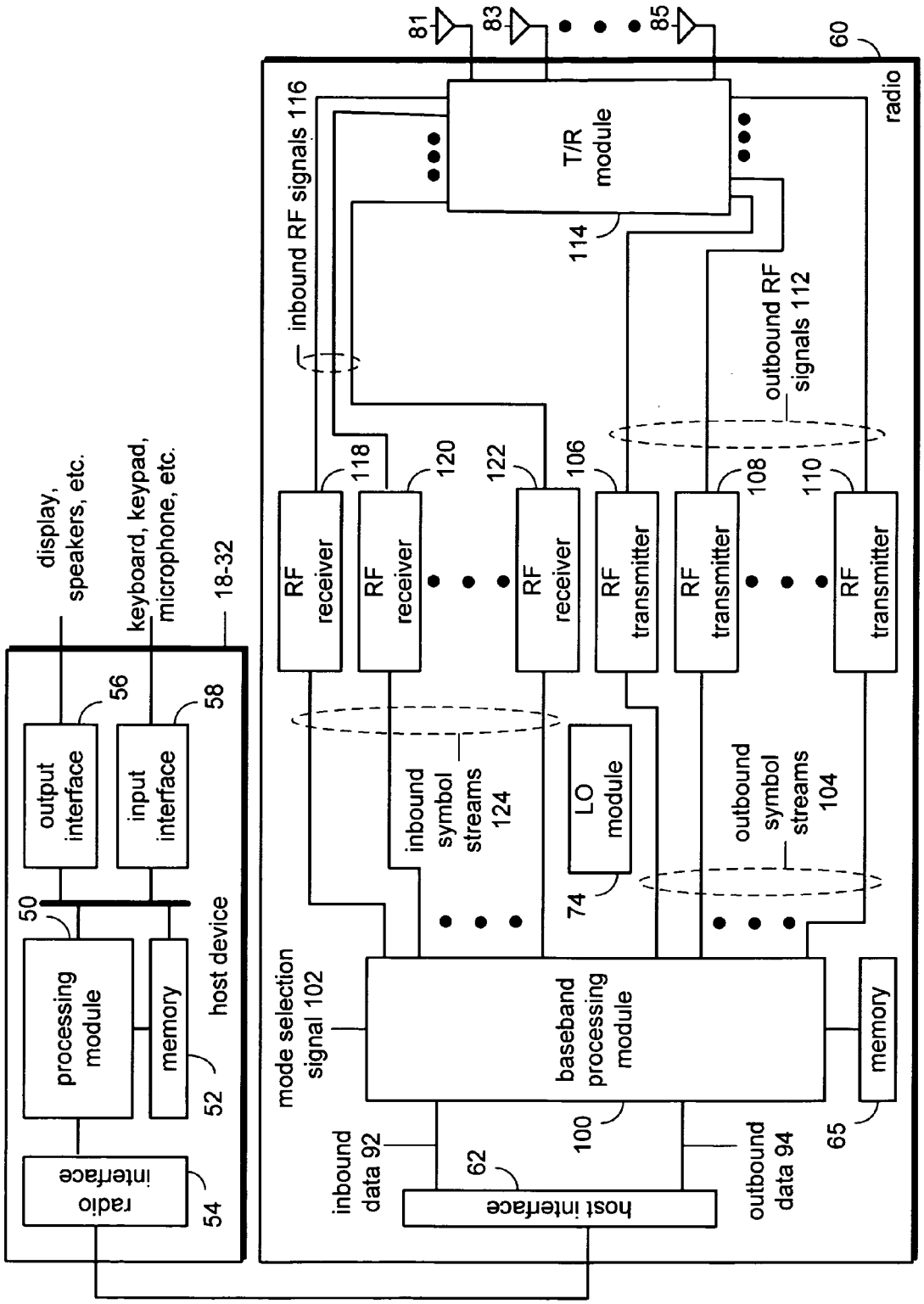
host device
18-32
display, speakers, etc.
keyboard, keypad, microphone, etc.
output interface
56
input interface
58
50
processing module
memory
52
radio interface
54
radio
60
81
83
85
T/R module
114
inbound RF signals 116
outbound RF signals 112
RF receiver
118
RF receiver
120
RF receiver
122
RF transmitter
106
RF transmitter
108
RF transmitter
110
inbound symbol streams 124
outbound symbol streams 104
LO module
74
mode selection signal 102
baseband processing module
100
memory
65
inbound data 92
62
host interface
outbound data 94

FIG. 3

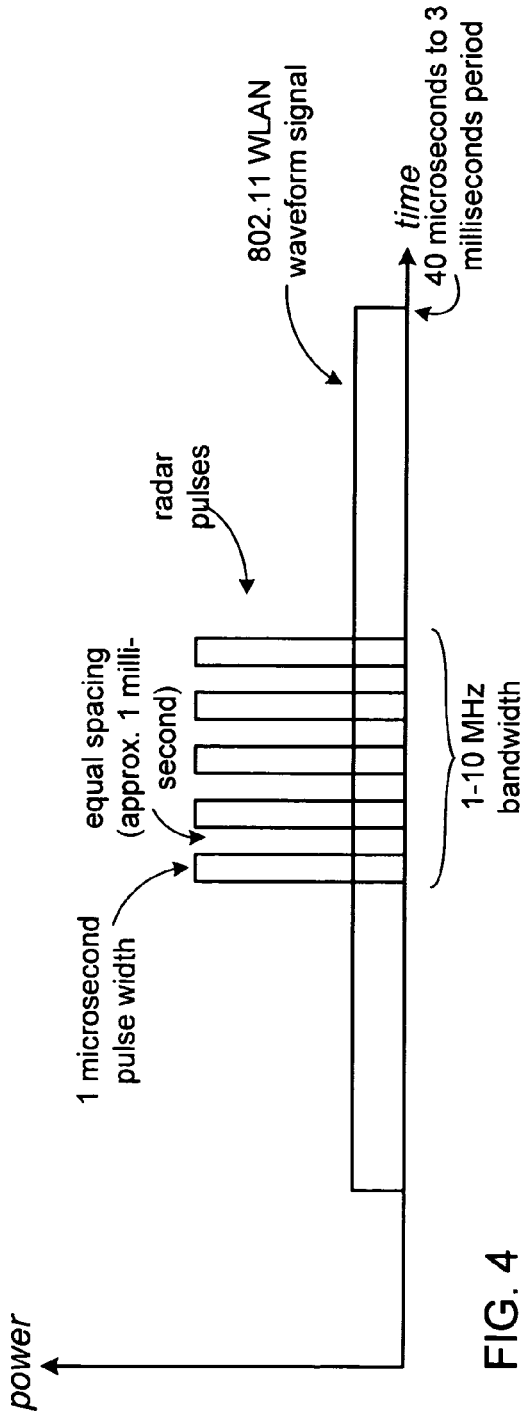
power
time
802.11 WLAN
waveform signal
40 microseconds to 3
milliseconds period
radar
pulses
equal spacing
(approx. 1 milli-
second)
1 microsecond
pulse width
1-10 MHz
bandwidth

FIG. 4

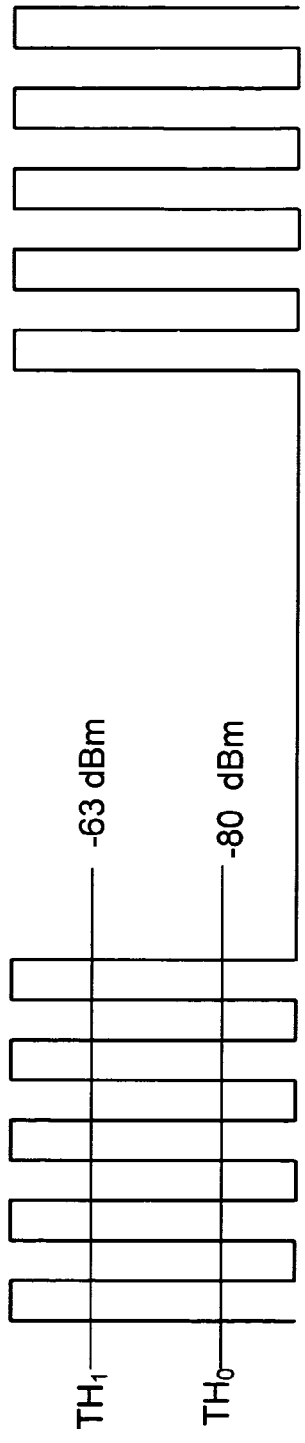
-63 dBm
-80 dBm
TH1
TH0

FIG. 5

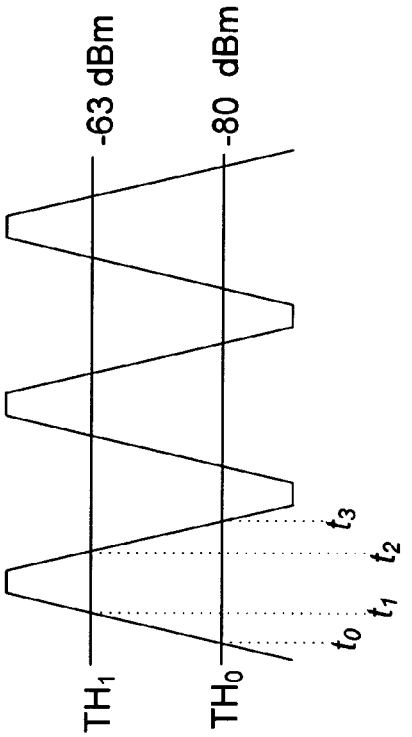
-63 dBm
-80 dBm
TH_1
TH_0
t_0
t_1
t_2
t_3

FIG. 7

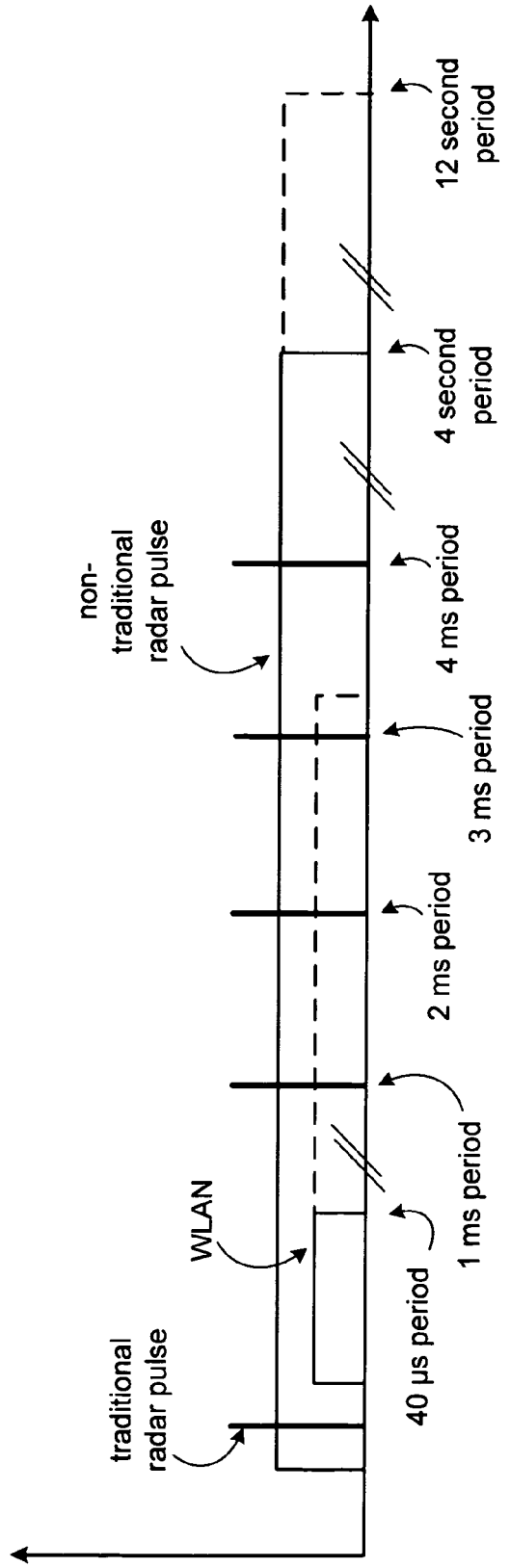
traditional radar pulse
WLAN
non-traditional radar pulse
40 µs period
1 ms period
2 ms period
3 ms period
4 ms period
4 second period
12 second period

FIG. 6

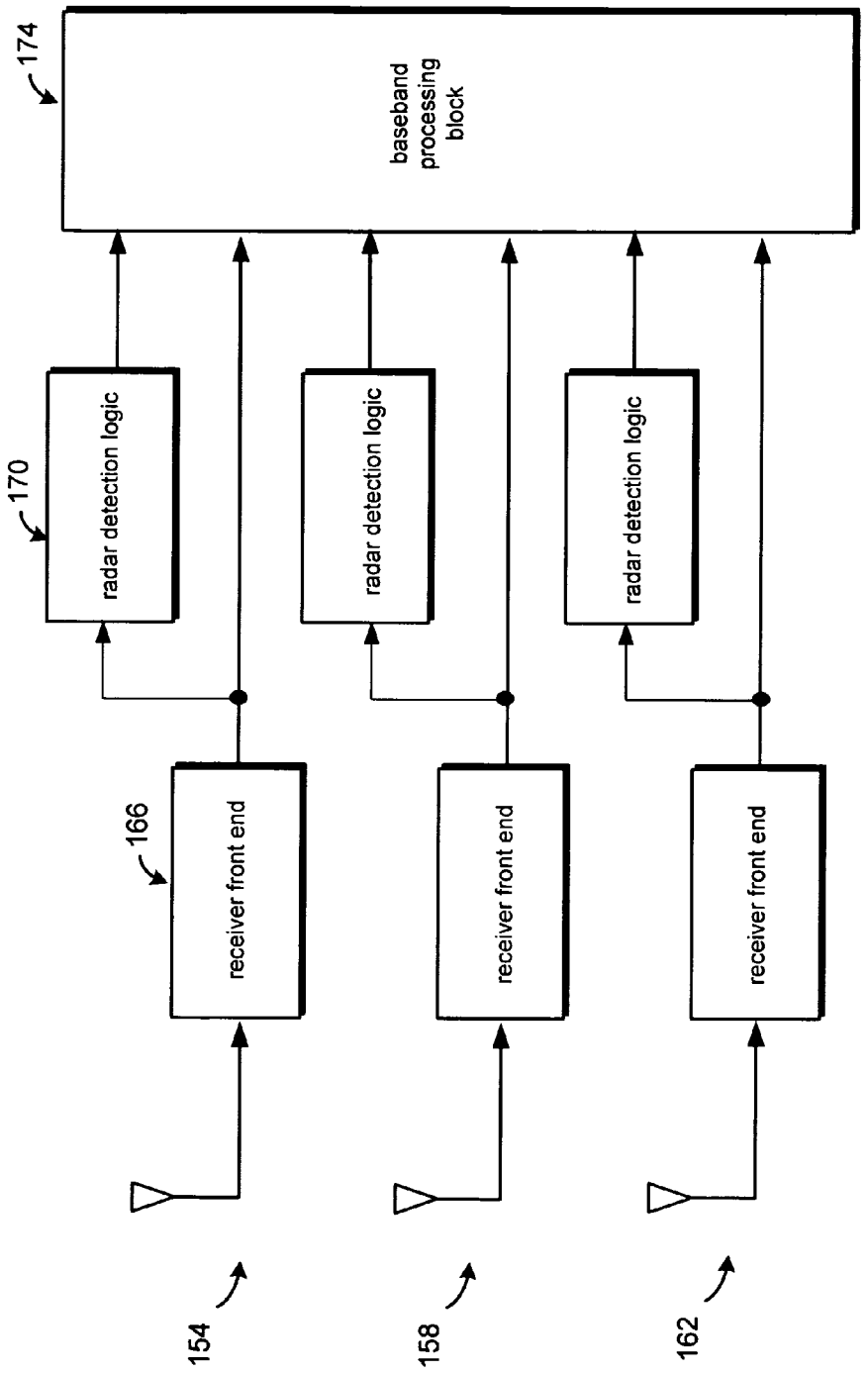
174
baseband processing block
170
radar detection logic
radar detection logic
radar detection logic
166
receiver front end
receiver front end
receiver front end
154
158
162
150

FIG. 8

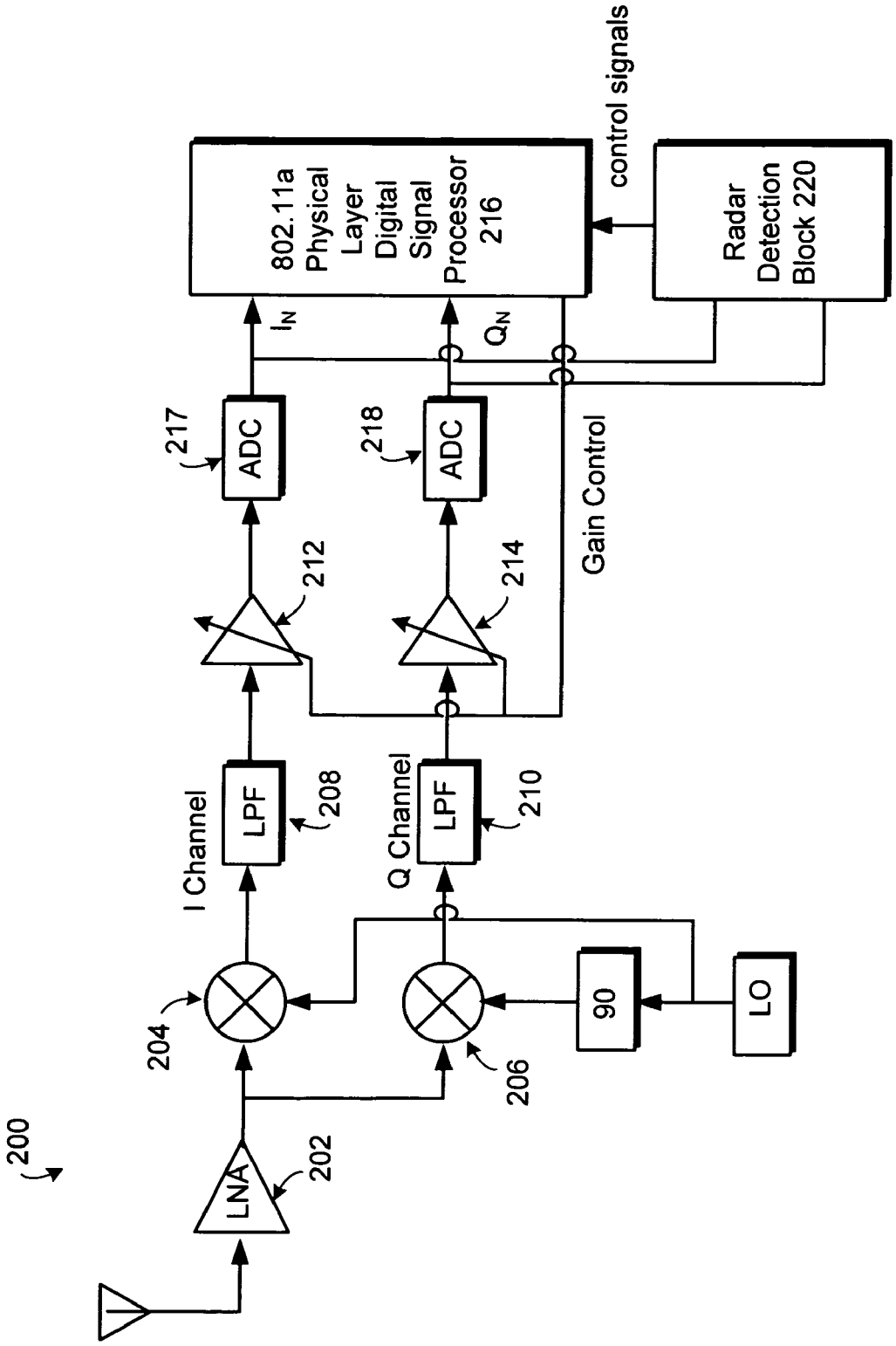
200
LNA
202
204
206
90
LO
I Channel
Q Channel
LPF
208
LPF
210
212
214
Gain Control
ADC
217
ADC
218
I_N
Q_N
802.11a Physical Layer Digital Signal Processor 216
control signals
Radar Detection Block 220

FIG. 9

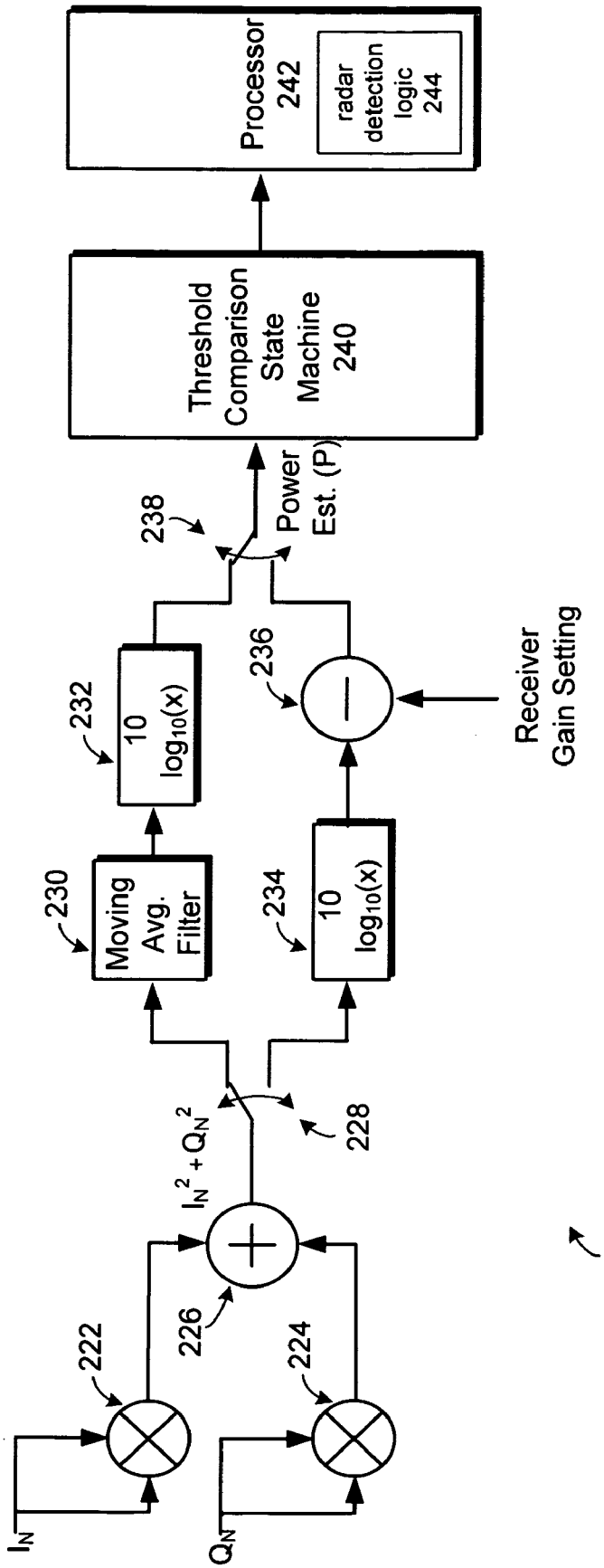
Processor
242
radar detection logic
244
Threshold Comparison State Machine
240
238
Power Est. (P)
232
10 log10(x)
236
Receiver Gain Setting
230
Moving Avg. Filter
234
10 log10(x)
228
I_N^2 + Q_N^2
222
226
224
I_N
Q_N
220

FIG. 10

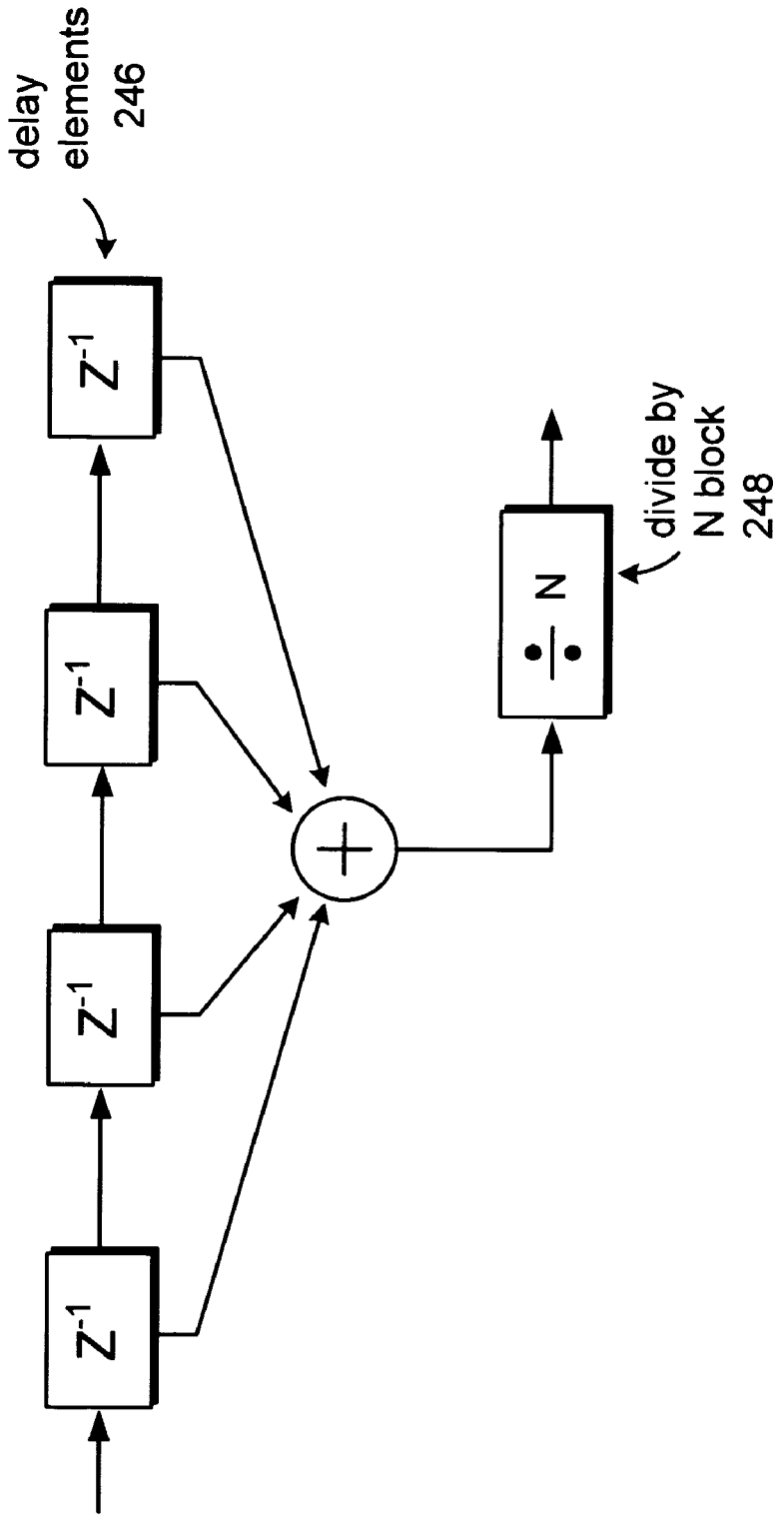

FIG. 11

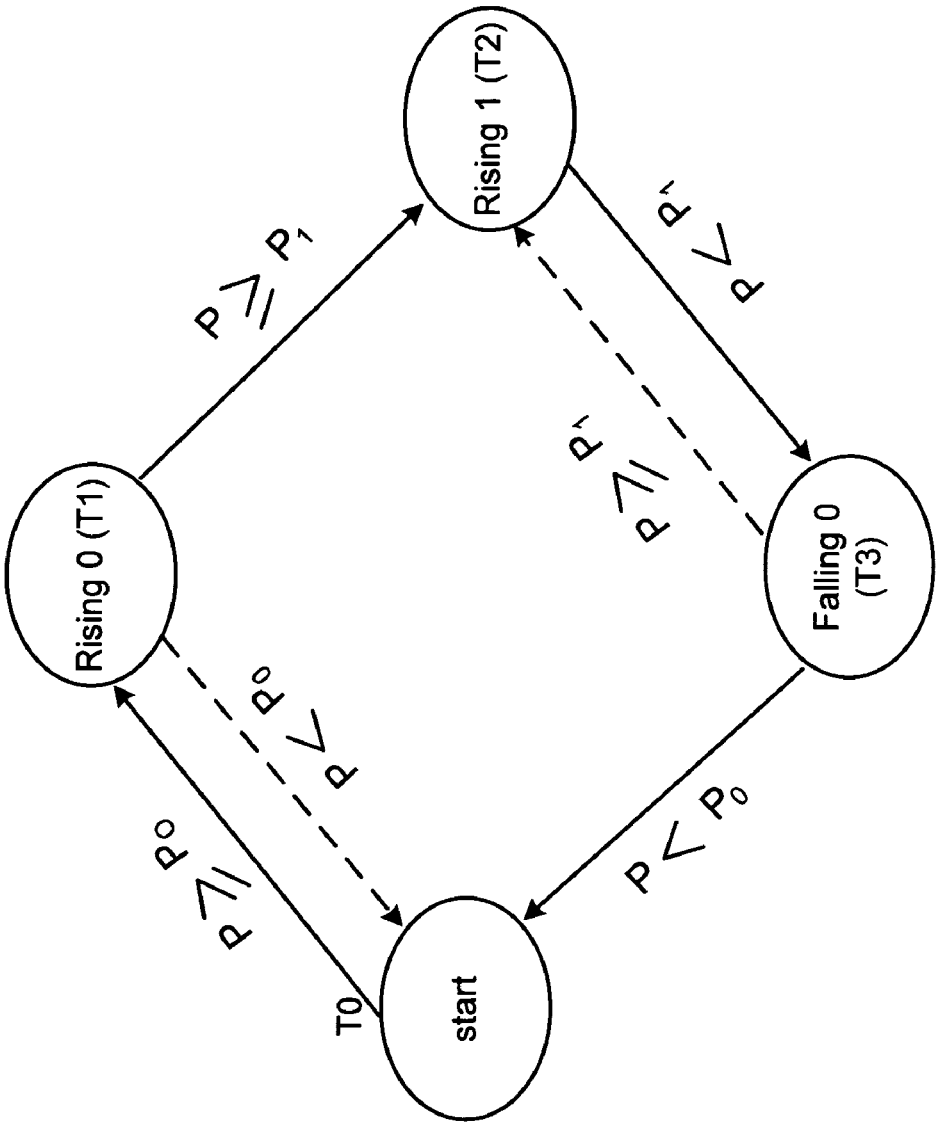
Rising 1 (T2)
Rising 0 (T1)
Falling 0 (T3)
start
T0
P ≧ P1
P < P1
P ≧ P1
P < P0
P ≧ P0
P < P0

FIG. 12

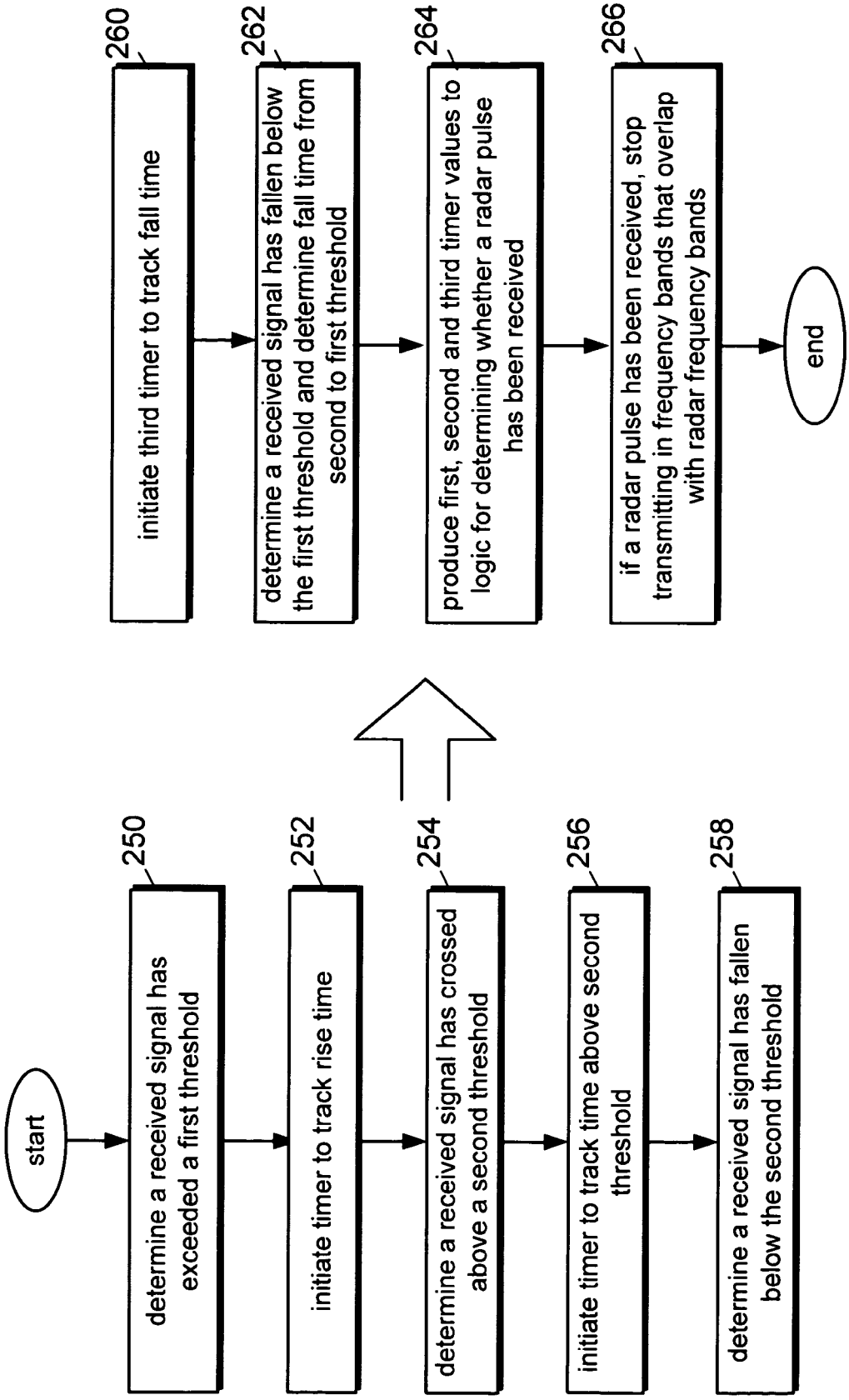
start
250
determine a received signal has exceeded a first threshold
252
initiate timer to track rise time
254
determine a received signal has crossed above a second threshold
256
initiate timer to track time above second threshold
258
determine a received signal has fallen below the second threshold
260
initiate third timer to track fall time
262
determine a received signal has fallen below the first threshold and determine fall time from second to first threshold
264
produce first, second and third timer values to logic for determining whether a radar pulse has been received
266
if a radar pulse has been received, stop transmitting in frequency bands that overlap with radar frequency bands
end

FIG. 13

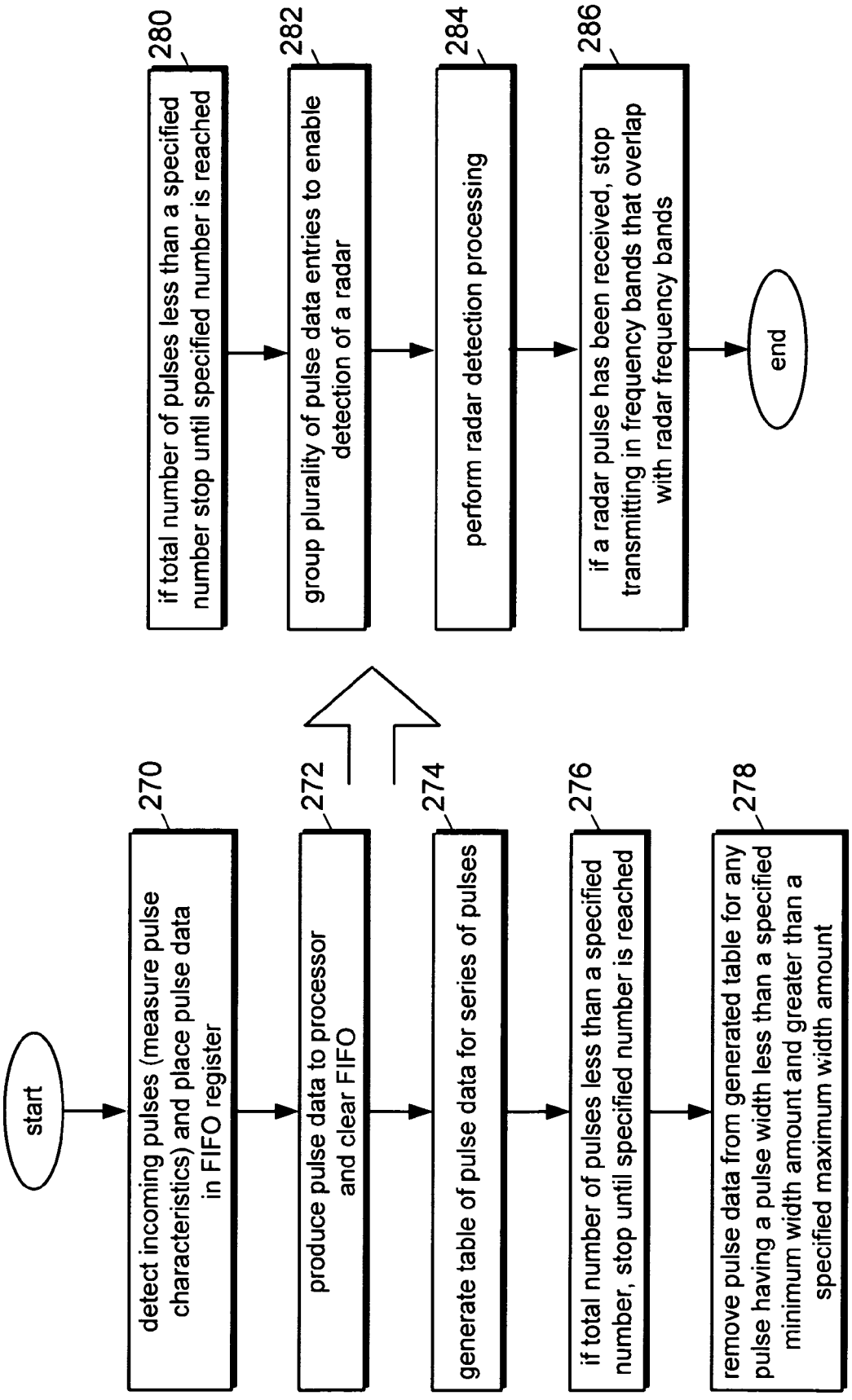
start
detect incoming pulses (measure pulse characteristics) and place pulse data in FIFO register
270
produce pulse data to processor and clear FIFO
272
generate table of pulse data for series of pulses
274
if total number of pulses less than a specified number, stop until specified number is reached
276
remove pulse data from generated table for any pulse having a pulse width less than a specified minimum width amount and greater than a specified maximum width amount
278
if total number of pulses less than a specified number stop until specified number is reached
280
group plurality of pulse data entries to enable detection of a radar
282
perform radar detection processing
284
if a radar pulse has been received, stop transmitting in frequency bands that overlap with radar frequency bands
286
end

FIG. 14

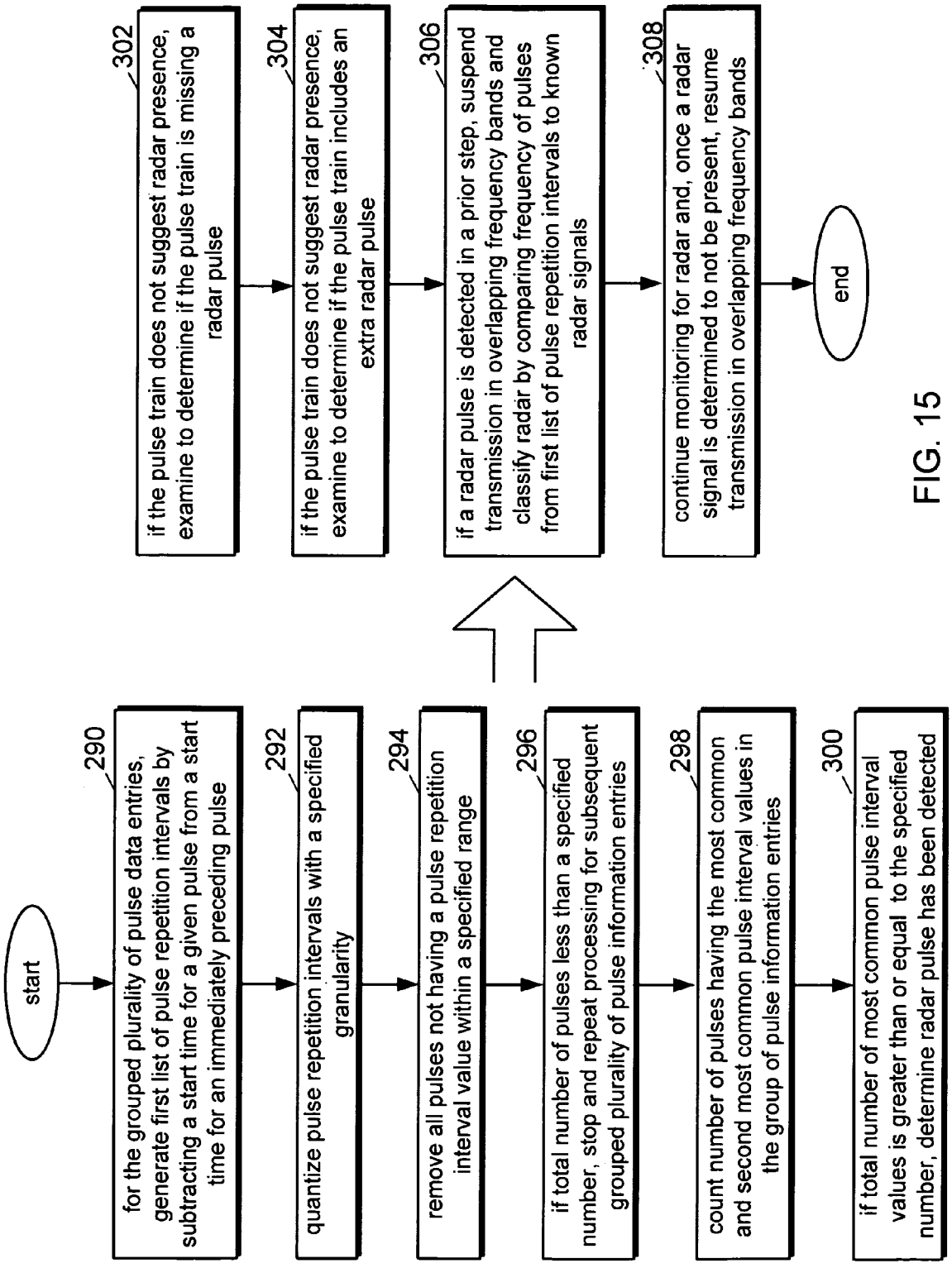
start
290
for the grouped plurality of pulse data entries, generate first list of pulse repetition intervals by subtracting a start time for a given pulse from a start time for an immediately preceding pulse
292
quantize pulse repetition intervals with a specified granularity
294
remove all pulses not having a pulse repetition interval value within a specified range
296
if total number of pulses less than a specified number, stop and repeat processing for subsequent grouped plurality of pulse information entries
298
count number of pulses having the most common and second most common pulse interval values in the group of pulse information entries
300
if total number of most common pulse interval values is greater than or equal to the specified number, determine radar pulse has been detected
302
if the pulse train does not suggest radar presence, examine to determine if the pulse train is missing a radar pulse
304
if the pulse train does not suggest radar presence, examine to determine if the pulse train includes an extra radar pulse
306
if a radar pulse is detected in a prior step, suspend transmission in overlapping frequency bands and classify radar by comparing frequency of pulses from first list of pulse repetition intervals to known radar signals
308
continue monitoring for radar and, once a radar signal is determined to not be present, resume transmission in overlapping frequency bands
end

FIG. 15

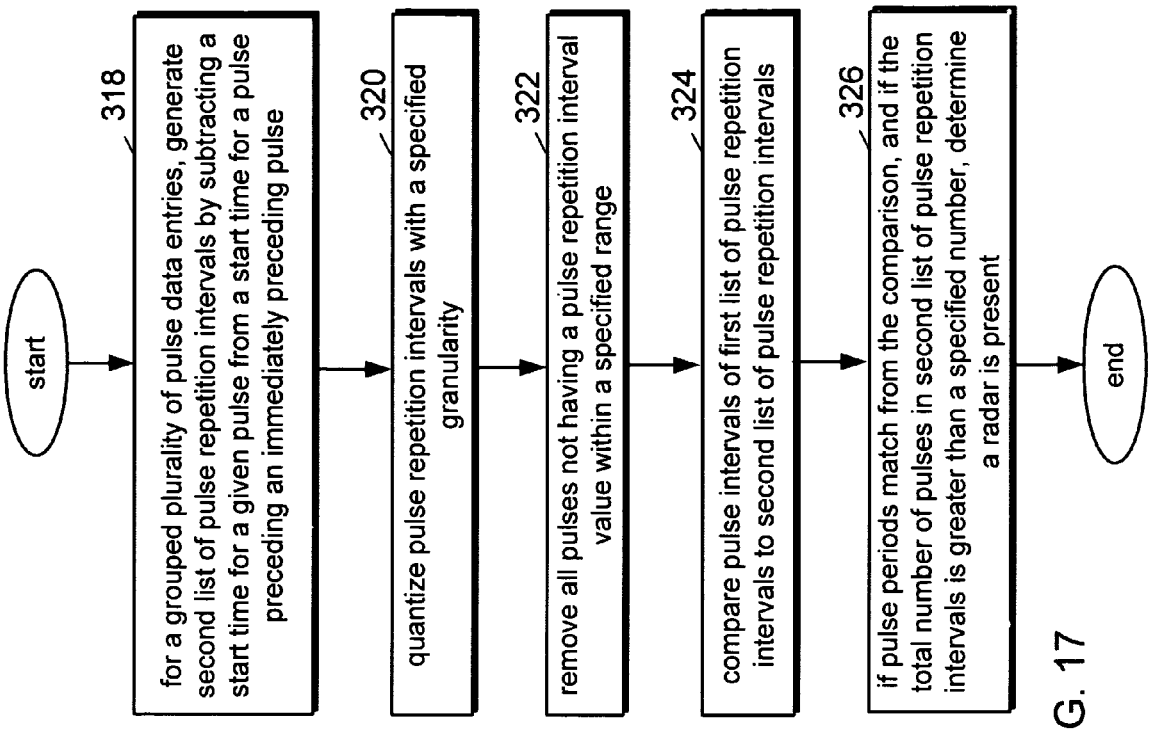
start
318
for a grouped plurality of pulse data entries, generate second list of pulse repetition intervals by subtracting a start time for a given pulse from a start time for a pulse preceding an immediately preceding pulse
320
quantize pulse repetition intervals with a specified granularity
322
remove all pulses not having a pulse repetition interval value within a specified range
324
compare pulse intervals of first list of pulse repetition intervals to second list of pulse repetition intervals
326
if pulse periods match from the comparison, and if the total number of pulses in second list of pulse repetition intervals is greater than a specified number, determine a radar is present
end

FIG. 17

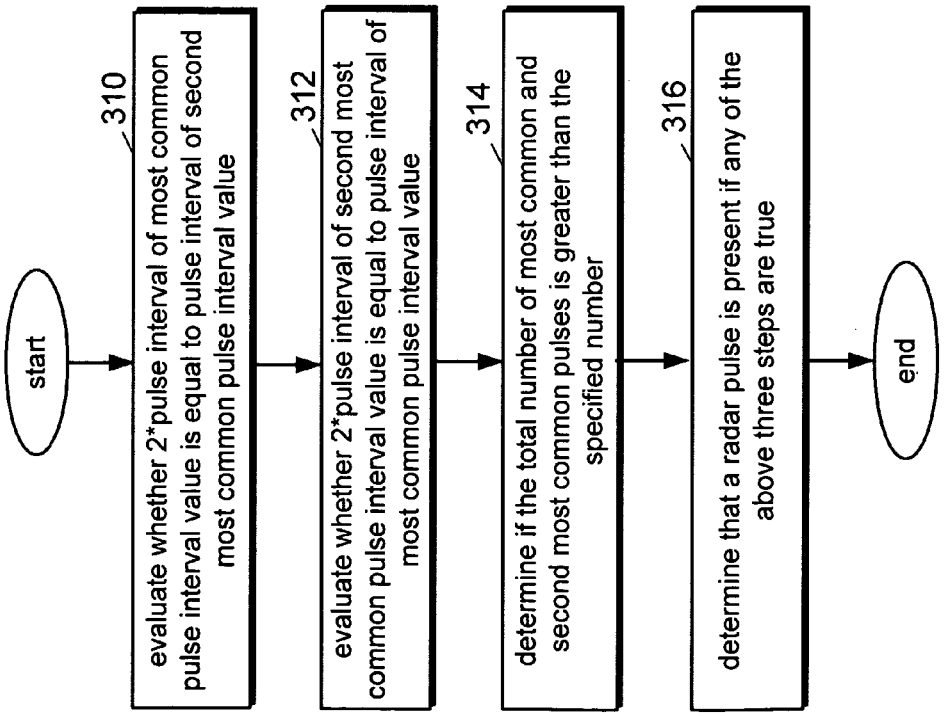
start
310
evaluate whether 2*pulse interval of most common pulse interval value is equal to pulse interval of second most common pulse interval value
312
evaluate whether 2*pulse interval of second most common pulse interval value is equal to pulse interval of most common pulse interval value
314
determine if the total number of most common and second most common pulses is greater than the specified number
316
determine that a radar pulse is present if any of the above three steps are true
end

FIG. 16

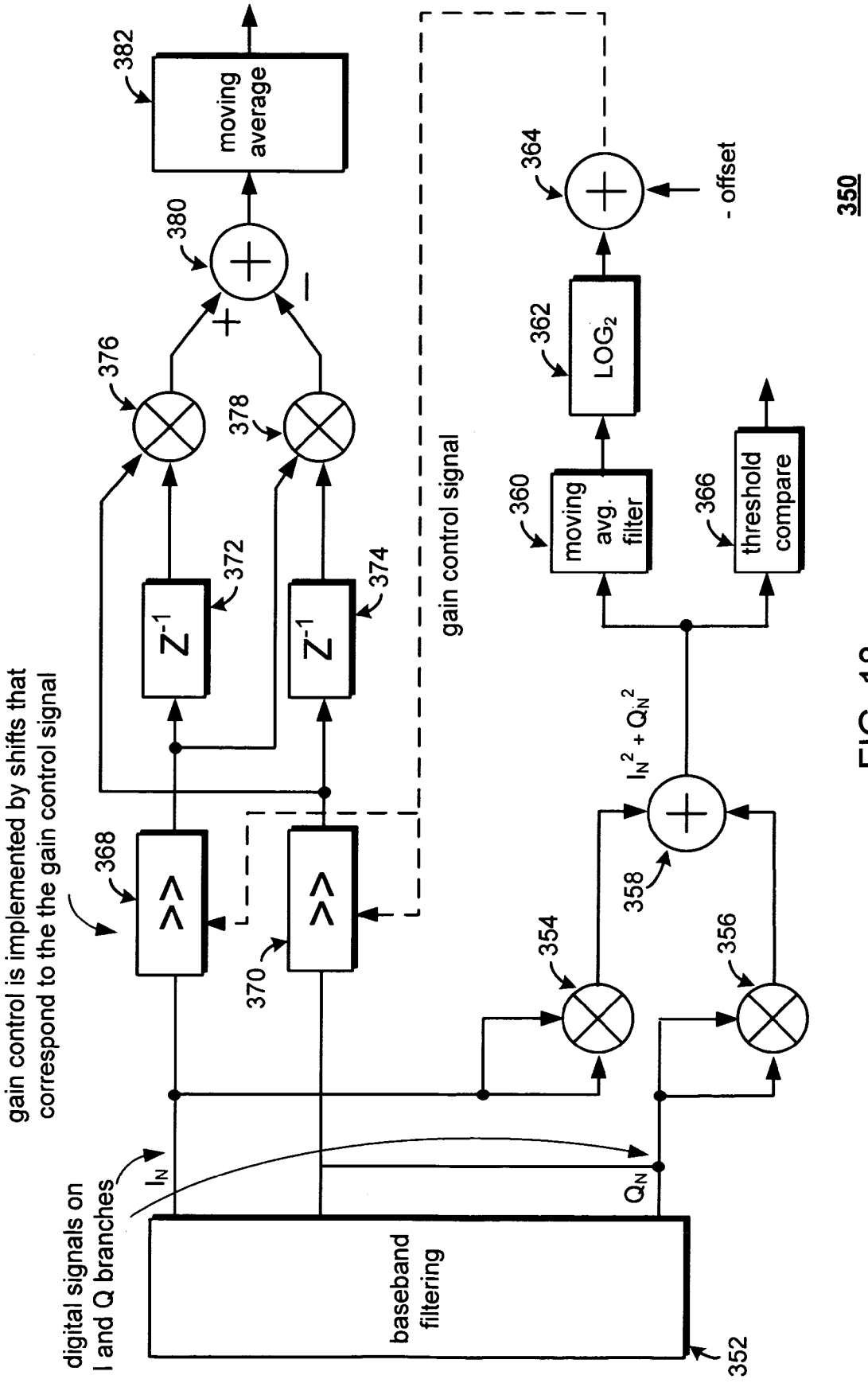
382
moving average
380
+
−
376
378
372
374
Z^{-1}
Z^{-1}
gain control signal
364
- offset
362
LOG_2
360
moving avg. filter
366
threshold compare
gain control is implemented by shifts that correspond to the the gain control signal
368
>>
>>
370
$I_N^2 + Q_N^2$
358
354
356
digital signals on I and Q branches
I_N
Q_N
baseband filtering
352
350

FIG. 18

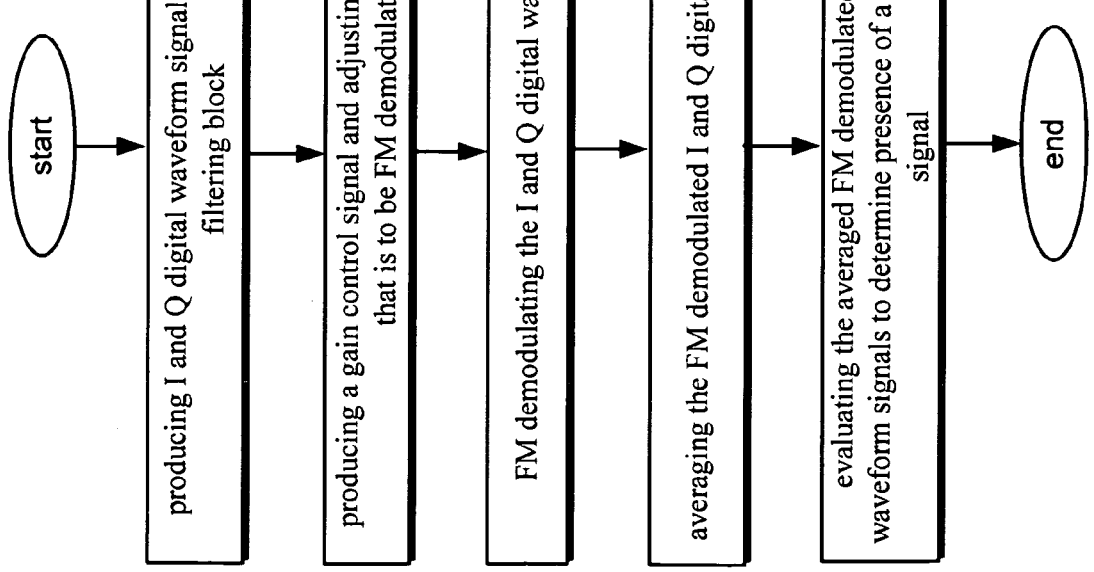
start
400
producing I and Q digital waveform signals from a baseband filtering block
402
producing a gain control signal and adjusting a gain of a signal that is to be FM demodulated
404
FM demodulating the I and Q digital waveform signals
406
averaging the FM demodulated I and Q digital waveform signals
408
evaluating the averaged FM demodulated I and Q digital waveform signals to determine presence of a non-traditional radar signal
end

FIG. 19

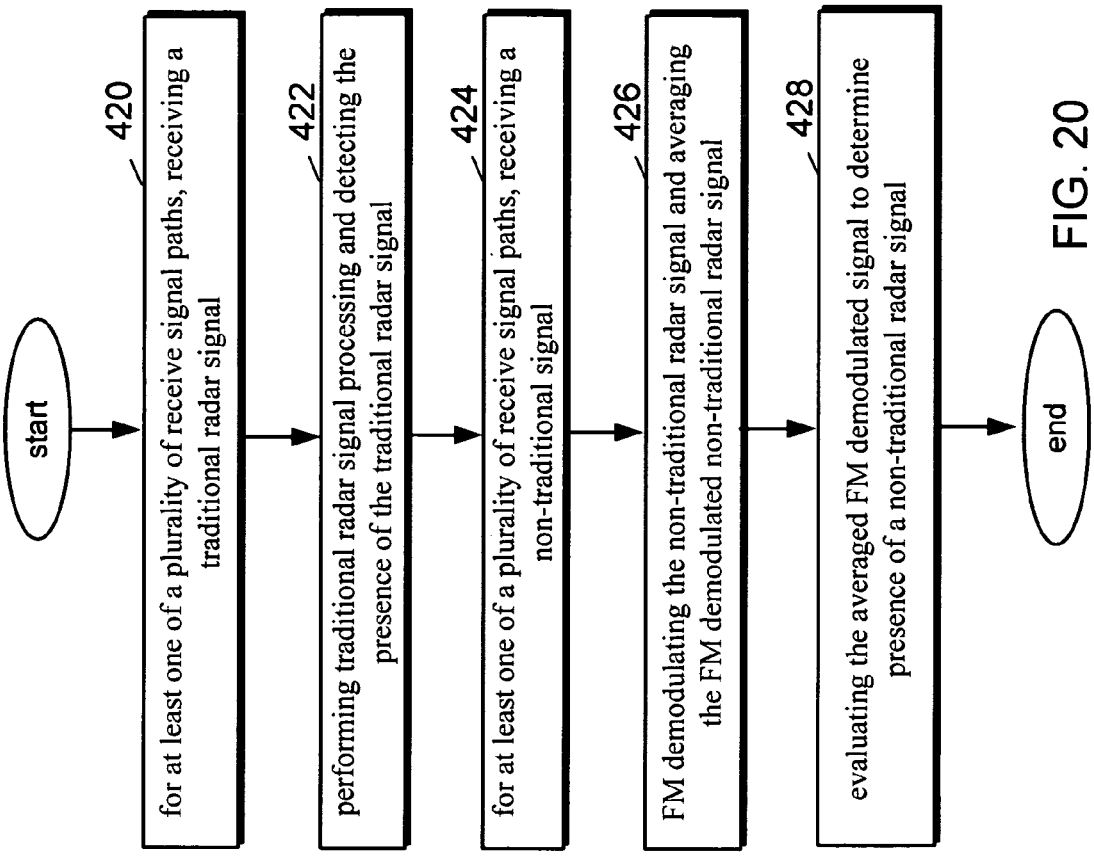
start
420
for at least one of a plurality of receive signal paths, receiving a traditional radar signal
422
performing traditional radar signal processing and detecting the presence of the traditional radar signal
424
for at least one of a plurality of receive signal paths, receiving a non-traditional signal
426
FM demodulating the non-traditional radar signal and averaging the FM demodulated non-traditional radar signal
428
evaluating the averaged FM demodulated signal to determine presence of a non-traditional radar signal
end

FIG. 20

RADAR DETECTION CIRCUIT FOR A WLAN TRANSCEIVER

CROSS REFERENCE TO RELATED PATENTS

The present U.S. Utility Patent Application claims priority pursuant to 35 U.S.C. §119(e) to the following U.S. Provisional Patent Application which is hereby incorporated herein by reference in its entirety and made part of the present U.S. Utility Patent Application for all purposes:

1. U.S. Provisional Application Ser. No. 60/735,521, entitled "Radar Detection Circuit for a WLAN Transceiver," filed Nov. 11, 2005, expired.

The present U.S. Utility Patent Application claims priority pursuant to 35 U.S.C. §120, as a continuation-in-part (CIP), to the following U.S. Utility Patent Applications which are hereby incorporated herein by reference in their entirety and made part of the present U.S. Utility Patent Application for all purposes:

1. U.S. Utility Application Ser. No. 10/815,163, entitled "Radar Detection Circuit for a WLAN Transceiver," filed Mar. 31, 2004, which claims priority pursuant to 35 U.S.C. §119(e) to the following U.S. Provisional Patent Application:
   a. U.S. Provisional Application Ser. No. 60/502,934, entitled "Radar Detection Circuit for a WLAN Receiver", filed Sep. 15, 2003, expired.
2. Utility Application Ser. No. 10/815,161, entitled "Radar Detection from Pulse Record with Interference", filed Mar. 31, 2004, pending, which claims priority pursuant to 35 U.S.C. §119(e) to the following U.S. Provisional Patent Application:
   a. U.S. Provisional Application Ser. No. 60/502,934, entitled "Radar Detection Circuit for a WLAN Receiver", filed Sep. 15, 2003, expired.

BACKGROUND

1. Technical Field

The present invention relates to wireless communications and, more particularly, wideband wireless communication systems.

2. Related Art

Communication systems are known to support wireless and wire lined communications between wireless and/or wire lined communication devices. Such communication systems range from national and/or international cellular telephone systems to the Internet to point-to-point in-home wireless networks. Each type of communication system is constructed, and hence operates, in accordance with one or more communication standards. For instance, wireless communication systems may operate in accordance with one or more standards, including, but not limited to, IEEE 802.11, Bluetooth, advanced mobile phone services (AMPS), digital AMPS, global system for mobile communications (GSM), code division multiple access (CDMA), local multi-point distribution systems (LMDS), multi-channel-multi-point distribution systems (MMDS), and/or variations thereof.

Depending on the type of wireless communication system, a wireless communication device, such as a cellular telephone, two-way radio, personal digital assistant (PDA), personal computer (PC), laptop computer, home entertainment equipment, etc., communicates directly or indirectly with other wireless communication devices. For direct communications (also known as point-to-point communications), the participating wireless communication devices tune their receivers and transmitters to the same channel or channels

(e.g., one of a plurality of radio frequency (RF) carriers of the wireless communication system) and communicate over that channel(s). For indirect wireless communications, each wireless communication device communicates directly with an associated base station (e.g., for cellular services) and/or an associated access point (e.g., for an in-home or in-building wireless network) via an assigned channel. To complete a communication connection between the wireless communication devices, the associated base stations and/or associated access points communicate with each other directly, via a system controller, via a public switched telephone network (PSTN), via the Internet, and/or via some other wide area network.

Each wireless communication device includes a built-in radio transceiver (i.e., receiver and transmitter) or is coupled to an associated radio transceiver (e.g., a station for in-home and/or in-building wireless communication networks, RF modem, etc.). As is known, the transmitter includes a data modulation stage, one or more intermediate frequency stages, and a power amplifier. The data modulation stage converts raw data into baseband signals in accordance with the particular wireless communication standard. The one or more intermediate frequency stages mix the baseband signals with one or more local oscillations to produce RF signals. The power amplifier amplifies the RF signals prior to transmission via an antenna.

As is also known, the receiver is coupled to the antenna and includes a low noise amplifier, one or more intermediate frequency stages, a filtering stage, and a data recovery stage. The low noise amplifier receives an inbound RF signal via the antenna and amplifies it. The one or more intermediate frequency stages mix the amplified RF signal with one or more local oscillations to convert the amplified RF signal into a baseband signal or an intermediate frequency (IF) signal. As used herein, the term "low IF" refers to both baseband and intermediate frequency signals. A filtering stage filters the low IF signals to attenuate unwanted out of band signals to produce a filtered signal. The data recovery stage recovers raw data from the filtered signal in accordance with the particular wireless communication standard.

One approach to using a higher intermediate frequency is to convert the RF signal to an intermediate frequency sufficiently low to allow the integration of on-chip channel selection filters. For example, some narrow band or low data rate systems, such as Bluetooth, use this low intermediate frequency design approach.

Active mixers used in direct conversion radios, as well as radios that employ an intermediate conversion step, typically comprise input transconductance elements, switches and an output load. These active mixers often have varying output signal characteristics due to environmental conditions, such as temperature, and process and manufacturing variations. These varying output signal characteristics can, for example, result in a mixer producing an errant local oscillation signal that affects the accuracy of an output signal's frequency.

Having inaccurate output frequencies can result in many undesirable outcomes, including unwanted signal filtering by a downstream filter.

Other approaches are also being pursued to achieve the design goal of building entire radios on a single chip. With all of the foregoing design goals, however, there is being realized an increasing need for additional frequency bands for use by radio receivers and transmitters of all types. Along these lines, a frequency band that has heretofore been reserved exclusively for radar systems is being opened for use for at least some types of wireless communication systems. Among other systems, wireless local area network (LAN) systems are

being developed to take advantage of the frequency band that is being opened up which has been reserved for radar. One design issue, however, that accompanies any wireless LAN device that operates in this frequency band is that of coexistence with radar systems. More specifically, a need exists for a wireless LAN transceiver to give priority to a radar when a radar operation is detected. Accordingly, the wireless LAN, in such a scenario, would be required to detect a radar signal within a specified response time and to communicate over a non-overlapping frequency band thereto. Along these lines, recent changes to government regulations will allow wireless LANs (WLANs) to share frequency spectrum with licensed radar systems. Specifically, the frequency bands 5.25-5.35 GHz and 5.27-5.75 GHz will be open in Europe, and perhaps worldwide at some point in the future. Since these frequency bands are shared, the wireless LANs will be required to take a subordinate role to the licensed radar systems. This includes the incorporation of dynamic frequency selection (DFS) within the WLAN that will avoid spectrum that is occupied by a radar. What is needed, therefore, is a circuit and method for determining when a radar signal is present.

SUMMARY OF THE INVENTION

The present invention is directed to apparatus and methods of operation that are further described in the following Brief Description of the Drawings, the Detailed Description of the Invention, and the claims. Other features and advantages of the present invention will become apparent from the following detailed description of the invention made with reference to the accompanying drawings.

BRIEF DESCRIPTION OF THE DRAWINGS

A better understanding of the present invention can be obtained when the following detailed description of the preferred embodiment is considered with the following drawings, in which:

FIG. **1** is a functional block diagram illustrating a communication system that includes circuit devices and network elements and operation thereof according to one embodiment of the invention;

FIG. **2** is a schematic block diagram illustrating a wireless communication device as a host device and an associated radio;

FIG. **3** is a schematic block diagram illustrating a wireless communication device as a host device and an associated radio with multiple input and output signal paths for generating and received multiple communication signals;

FIG. **4** is a diagram that illustrates the relative difference between a traditional radar signal waveform and an 802.11 wireless LAN waveform signal;

FIG. **5** is a diagram illustrating two groups (blocks) of pulses of a radar signal;

FIG. **6** is a signal diagram illustrating the difference in signal length for WLAN signals, traditional radar signals, and non-traditional radar signals and is used to explain operational aspects of the various embodiments of the present invention;

FIG. **7** is a diagram that illustrates the measurement of rise time and fall time of the pulses of the radar signal;

FIG. **8** is a functional block diagram of a MIMO radio transceiver, and more specifically, of a receiver portion of a radar transceiver according to one embodiment of the invention;

FIG. **9** is a functional block diagram of a portion of a radio transceiver according to one embodiment of the present invention;

FIG. **10** is a block diagram of a radar detector block for use in an 802.11(a) receiver that may be within a traditional transceiver or within a MIMO transceiver operable to detect a traditional radar signal for a variety of signal waveforms including traditional radar pulses and 802.11(a) signals according to one embodiment of the invention;

FIG. **11** is a functional block diagram of a moving average block as employed in one embodiment of the present invention;

FIG. **12** illustrates a threshold comparison state machine; and

FIG. **13** is a flowchart that illustrates a series of steps that are performed according to one embodiment of the invention that are used for tracking radar, especially traditional radar;

FIG. **14** is a flowchart illustrating a method for determining whether a radar signal is present according to one embodiment of the invention;

FIG. **15** is a flowchart of a method for performing radar detection processing for a traditional radar signal;

FIG. **16** is a flowchart illustrating a method for performing radar detection processing for missing pulses;

FIG. **17** is a flowchart illustrating a method for performing radar detection processing for extra pulses;

FIG. **18** is a functional block diagram of one embodiment of the invention of radar detection circuitry for detecting non-traditional radar pulses;

FIG. **19** is a flow chart that illustrates operation of a radio receiver according to one embodiment of the invention; and

FIG. **20** is a flow chart that illustrates a method for detecting traditional and non-traditional radar signals according to one embodiment of the invention.

DETAILED DESCRIPTION OF THE DRAWINGS

FIG. **1** is a functional block diagram illustrating a communication system that includes circuit devices and network elements and operation thereof according to one embodiment of the invention. More specifically, a plurality of network service areas **04**, **06** and **08** are a part of a network **10**. Network **10** includes a plurality of base stations or access points (APs) **12-16**, a plurality of wireless communication devices **18-32** and a network hardware component **34**. The wireless communication devices **18-32** may be laptop computers **18** and **26**, personal digital assistants **20** and **30**, personal computers **24** and **32** and/or cellular telephones **22** and **28**. The details of the wireless communication devices will be described in greater detail with reference to figures described below.

The base stations or APs **12-16** are operably coupled to the network hardware component **34** via local area network (LAN) connections **36**, **38** and **40**. The network hardware component **34**, which may be a router, switch, bridge, modem, system controller, etc., provides a wide area network (WAN) connection **42** for the communication system **10** to an external network element such as WAN **44**. Each of the base stations or access points **12-16** has an associated antenna or antenna array to communicate with the wireless communication devices in its area. Typically, the wireless communication devices **18-32** register with the particular base station or access points **12-16** to receive services from the communication system **10**. For direct connections (i.e., point-to-point communications), wireless communication devices communicate directly via an allocated channel.

Typically, base stations are used for cellular telephone systems and like-type systems, while access points are used for in-home or in-building wireless networks. Regardless of the particular type of communication system, each wireless communication device includes a built-in radio and/or is coupled to a radio. Any such communication device of FIG. **1** that is operable to transmit over a specified radar frequency includes one or more embodiments of the present invention.

FIG. **2** is a functional block diagram illustrating a wireless communication host device **18-32** and an associated radio **60**. For cellular telephone hosts, radio **60** is a built-in component. For personal digital assistants hosts, laptop hosts, and/or personal computer hosts, the radio **60** may be built-in or an externally coupled component.

As illustrated, wireless communication host device **18-32** includes a processing module **50**, a memory **52**, a radio interface **54**, an input interface **58** and an output interface **56**. Processing module **50** and memory **52** execute the corresponding instructions that are typically done by the host device. For example, for a cellular telephone host device, processing module **50** performs the corresponding communication functions in accordance with a particular cellular telephone standard.

Radio interface **54** allows data to be received from and sent to radio **60**. For data received from radio **60** (e.g., inbound data), radio interface **54** provides the data to processing module **50** for further processing and/or routing to output interface **56**. Output interface **56** provides connectivity to an output device such as a display, monitor, speakers, etc., such that the received data may be displayed. Radio interface **54** also provides data from processing module **50** to radio **60**. Processing module **50** may receive the outbound data from an input device such as a keyboard, keypad, microphone, etc., via input interface **58** or generate the data itself. For data received via input interface **58**, processing module **50** may perform a corresponding host function on the data and/or route it to radio **60** via radio interface **54**.

Radio **60** includes a host interface **62**, a digital receiver processing module **64**, an analog-to-digital converter **66**, a radar detection block **67**, a filtering/gain module **68**, a down-conversion module **70**, a low noise amplifier **72**, a receiver filter module **71**, a transmitter/receiver (Tx/Rx) switch module **73**, a local oscillation module **74**, a memory **75**, a digital transmitter processing module **76**, a digital-to-analog converter **78**, a filtering/gain module **80**, an up-conversion module **82**, a power amplifier **84**, a transmitter filter module **85**, and an antenna **86** operatively coupled as shown. The antenna **86** is shared by the transmit and receive paths as regulated by the Tx/Rx switch module **73**. The antenna implementation will depend on the particular standard to which the wireless communication device is compliant.

The radar detection block **67** is operable to receive a digital low frequency signal (either a baseband frequency or intermediate frequency signal in a digital form) from ADC **66** and to process such digital low frequency signal to determine whether a radar signal is present. In the described embodiment, radar detection block **67** is operable to detect both traditional radar pulses as well as newer non-traditional radar pulses including so called "bin 5" radar signals.

Radar detection block **67**, though shown as one block, may be implemented across several blocks including the digital transmitter processing module **76**. Generally, radar detection block **67** represents state or circuit level logic, computer instructions in memory that define related logic, or a combination of the state or circuit level logic and computer instructions. Generally though, radar detection block **67**, upon detecting a radar signal, prompts radio **60** to inhibit communications in frequency bands that overlap with radar and, in the case of ongoing communications, to switch outgoing communications to a non-overlapping frequency band (non-overlapping with radar).

Digital receiver processing module **64** and digital transmitter processing module **76**, in combination with operational instructions stored in memory **75**, execute digital receiver functions and digital transmitter functions, respectively. The digital receiver functions include, but are not limited to, demodulation, constellation demapping, decoding, and/or descrambling. The digital transmitter functions include, but are not limited to, scrambling, encoding, constellation mapping, and modulation. Digital receiver and transmitter processing modules **64** and **76**, respectively, may be implemented using a shared processing device, individual processing devices, or a plurality of processing devices. Such a processing device may be a microprocessor, micro-controller, digital signal processor, microcomputer, central processing unit, field programmable gate array, programmable logic device, state machine, logic circuitry, analog circuitry, digital circuitry, and/or any device that manipulates signals (analog and/or digital) based on operational instructions.

Memory **75** may be a single memory device or a plurality of memory devices. Such a memory device may be a read-only memory, random access memory, volatile memory, non-volatile memory, static memory, dynamic memory, flash memory, and/or any device that stores digital information. Note that when digital receiver processing module **64** and/or digital transmitter processing module **76** implements one or more of its functions via a state machine, analog circuitry, digital circuitry, and/or logic circuitry, the memory storing the corresponding operational instructions is embedded with the circuitry comprising the state machine, analog circuitry, digital circuitry, and/or logic circuitry. Memory **75** stores, and digital receiver processing module **64** and/or digital transmitter processing module **76** executes operational instructions corresponding to at least some of the functions illustrated herein.

In operation, radio **60** receives outbound data **94** from wireless communication host device **18-32** via host interface **62**. Host interface **62** routes outbound data **94** to digital transmitter processing module **76**, which processes outbound data **94** in accordance with a particular wireless communication standard or protocol (e.g., IEEE 802.11(a), IEEE 802.11b, Bluetooth, etc.) to produce digital transmission formatted data **96**. Digital transmission formatted data **96** will be a digital baseband signal or a digital low IF signal, where the low IF typically will be in the frequency range of one hundred kilohertz to a few megahertz.

Digital-to-analog converter **78** converts digital transmission formatted data **96** from the digital domain to the analog domain. Filtering/gain module **80** filters and/or adjusts the gain of the analog baseband signal prior to providing it to up-conversion module **82**. Up-conversion module **82** directly converts the analog baseband signal, or low IF signal, into an RF signal based on a transmitter local oscillation **83** provided by local oscillation module **74**. Power amplifier **84** amplifies the RF signal to produce an outbound RF signal **98**, which is filtered by transmitter filter module **85**. The antenna **86** transmits outbound RF signal **98** to a targeted device such as a base station, access point or other wireless communication device.

Radio **60** also receives an inbound RF signal **88** via antenna **86**, which was transmitted by a base station, an access point, or another wireless communication device. The antenna **86** provides inbound RF signal **88** to receiver filter module **71** via Tx/Rx switch module **73**, where Rx filter module **71** bandpass filters inbound RF signal **88**. The Rx filter module **71** provides

the filtered RF signal to low noise amplifier **72**, which amplifies inbound RF signal **88** to produce an amplified inbound RF signal. Low noise amplifier **72** provides the amplified inbound RF signal to down-conversion module **70**, which directly converts the amplified inbound RF signal into an inbound low IF signal or baseband signal based on a receiver local oscillation **81** provided by local oscillation module **74**. Down-conversion module **70** provides the inbound low IF signal or baseband signal to filtering/gain module **68**. Filtering/gain module **68** may be implemented in accordance with the teachings of the present invention to filter and/or attenuate the inbound low IF signal or the inbound baseband signal to produce a filtered inbound signal.

Analog-to-digital converter **66** converts the filtered inbound signal from the analog domain to the digital domain to produce digital reception formatted data **90**. Digital receiver processing module **64** decodes, descrambles, demaps, and/or demodulates digital reception formatted data **90** to recapture inbound data **92** in accordance with the particular wireless communication standard being implemented by radio **60**. Host interface **62** provides the recaptured inbound data **92** to the wireless communication host device **18-32** via radio interface **54**.

As one of average skill in the art will appreciate, the wireless communication device of FIG. **2** may be implemented using one or more integrated circuits. For example, the host device may be implemented on a first integrated circuit, while digital receiver processing module **64**, digital transmitter processing module **76** and memory **75** may be implemented on a second integrated circuit, and the remaining components of radio **60**, less antenna **86**, may be implemented on a third integrated circuit. As an alternate example, radio **60** may be implemented on a single integrated circuit. As yet another example, processing module **50** of the host device and digital receiver processing module **64** and digital transmitter processing module **76** may be a common processing device implemented on a single integrated circuit.

Memory **52** and memory **75** may be implemented on a single integrated circuit and/or on the same integrated circuit as the common processing modules of processing module **50**, digital receiver processing module **64**, and digital transmitter processing module **76**. As will be described, it is important that accurate oscillation signals are provided to mixers and conversion modules. A source of oscillation error is noise coupled into oscillation circuitry through integrated circuitry biasing circuitry. One embodiment of the present invention reduces the noise by providing a selectable pole low pass filter in current mirror devices formed within the one or more integrated circuits.

Local oscillation module **74** includes circuitry for adjusting an output frequency of a local oscillation signal provided therefrom. Local oscillation module **74** receives a frequency correction input that it uses to adjust an output local oscillation signal to produce a frequency corrected local oscillation signal output. While local oscillation module **74**, up-conversion module **82** and down-conversion module **70** are implemented to perform direct conversion between baseband and RF, it is understood that the principles herein may also be applied readily to systems that implement an intermediate frequency conversion step at a low intermediate frequency.

FIG. **3** is a functional block diagram illustrating a wireless communication device that includes the host device **18-32** and an associated radio **60**. For cellular telephone hosts, the radio **60** is a built-in component. For personal digital assistants hosts, laptop hosts, and/or personal computer hosts, the radio **60** may be built-in or an externally coupled component.

As illustrated, the host device **18-32** includes a processing module **50**, memory **52**, radio interface **54**, input interface **58** and output interface **56**. The processing module **50** and memory **52** execute the corresponding instructions that are typically done by the host device. For example, for a cellular telephone host device, the processing module **50** performs the corresponding communication functions in accordance with a particular cellular telephone standard.

The radio interface **54** allows data to be received from and sent to the radio **60**. For data received from the radio **60** (e.g., inbound data), the radio interface **54** provides the data to the processing module **50** for further processing and/or routing to the output interface **56**. The output interface **56** provides connectivity to an output display device such as a display, monitor, speakers, etc., such that the received data may be displayed. The radio interface **54** also provides data from the processing module **50** to the radio **60**. The processing module **50** may receive the outbound data from an input device such as a keyboard, keypad, microphone, etc., via the input interface **58** or generate the data itself. For data received via the input interface **58**, the processing module **50** may perform a corresponding host function on the data and/or route it to the radio **60** via the radio interface **54**.

Radio **60** includes a host interface **62**, a baseband processing module **100**, memory **65**, a plurality of radio frequency (RF) transmitters **106-110**, a transmit/receive (T/R) module **114**, a plurality of antennas **81-85**, a plurality of RF receivers **118-120**, and a local oscillation module **74**. The baseband processing module **100**, in combination with operational instructions stored in memory **65**, executes digital receiver functions and digital transmitter functions, respectively. The digital receiver functions include, but are not limited to, digital intermediate frequency to baseband conversion, demodulation, constellation demapping, decoding, de-interleaving, fast Fourier transform, cyclic prefix removal, space and time decoding, and/or descrambling. The digital transmitter functions include, but are not limited to, scrambling, encoding, interleaving, constellation mapping, modulation, inverse fast Fourier transform, cyclic prefix addition, space and time encoding, and digital baseband to IF conversion. The baseband processing module **100** may be implemented using one or more processing devices. Such a processing device may be a microprocessor, micro-controller, digital signal processor, microcomputer, central processing unit, field programmable gate array, programmable logic device, state machine, logic circuitry, analog circuitry, digital circuitry, and/or any device that manipulates signals (analog and/or digital) based on operational instructions. The memory **65** may be a single memory device or a plurality of memory devices. Such a memory device may be a read-only memory, random access memory, volatile memory, non-volatile memory, static memory, dynamic memory, flash memory, and/or any device that stores digital information. Note that when the baseband processing module **100** implements one or more of its functions via a state machine, analog circuitry, digital circuitry, and/or logic circuitry, the memory storing the corresponding operational instructions is embedded with the circuitry comprising the state machine, analog circuitry, digital circuitry, and/or logic circuitry.

In operation, the radio **60** receives outbound data **94** from the host device via the host interface **62**. The baseband processing module **100** receives the outbound data **94** and, based on a mode selection signal **102**, produces one or more outbound symbol streams **104**. The mode selection signal **102** will indicate a particular mode of operation that is compliant with one or more specific modes of the various IEEE 802.11 standards. For example, the mode selection signal **102** may

indicate a frequency band of 2.4 GHz, a channel bandwidth of 20 or 22 MHz and a maximum bit rate of 54 megabits-per-second. In this general category, the mode selection signal will further indicate a particular rate ranging from 1 megabit-per-second to 54 megabits-per-second. In addition, the mode selection signal will indicate a particular type of modulation, which includes, but is not limited to, Barker Code Modulation, BPSK, QPSK, CCK, 16 QAM and/or 64 QAM. The mode selection signal **102** may also include a code rate, a number of coded bits per subcarrier (NBPSC), coded bits per OFDM symbol (NCBPS), and/or data bits per OFDM symbol (NDBPS). The mode selection signal **102** may also indicate a particular channelization for the corresponding mode that provides a channel number and corresponding center frequency. The mode selection signal **102** may further indicate a power spectral density mask value and a number of antennas to be initially used for a multiple input multiple output (MIMO) wireless communication.

The baseband processing module **100**, based on the mode selection signal **102** produces one or more outbound symbol streams **104** from the outbound data **94**. For example, if the mode selection signal **102** indicates that a single transmit antenna is being utilized for the particular mode that has been selected, the baseband processing module **100** will produce a single outbound symbol stream **104**. Alternatively, if the mode selection signal **102** indicates 2, 3 or 4 antennas, the baseband processing module **100** will produce 2, 3 or 4 outbound symbol streams **104** from the outbound data **94**.

Depending on the number of outbound symbol streams **104** produced by the baseband processing module **100**, a corresponding number of the RF transmitters **106-110** are enabled to convert the outbound symbol streams **104** into outbound RF signals **112**. In general, each of the RF transmitters **106-110** includes a digital filter and upsampling module, a digital-to-analog conversion module, an analog filter module, a frequency up conversion module, a power amplifier, and a radio frequency bandpass filter. The RF transmitters **106-110** provide the outbound RF signals **112** to the transmit/receive module **114**, which provides each outbound RF signal to a corresponding antenna **81-85**.

When the radio **60** is in the receive mode, the transmit/receive module **114** receives one or more inbound RF signals **116** via the antennas **81-85** and provides them to one or more RF receivers **118-122**. The RF receiver **118-122** converts the inbound RF signals **116** into a corresponding number of inbound symbol streams **124**. The number of inbound symbol streams **124** will correspond to the particular mode in which the data was received. The baseband processing module **100** converts the inbound symbol streams **124** into inbound data **92**, which is provided to the host device **18-32** via the host interface **62**.

As one of average skill in the art will appreciate, the wireless communication device of FIG. **3** may be implemented using one or more integrated circuits. For example, the host device may be implemented on a first integrated circuit, the baseband processing module **100** and memory **65** may be implemented on a second integrated circuit, and the remaining components of the radio **60**, less the antennas **81-85**, may be implemented on a third integrated circuit. As an alternate example, the radio **60** may be implemented on a single integrated circuit. As yet another example, the processing module **50** of the host device and the baseband processing module **100** may be a common processing device implemented on a single integrated circuit. Further, the memory **52** and memory **65** may be implemented on a single integrated circuit and/or on the same integrated circuit as the common processing modules of processing module **50** and the baseband processing module **100**. While not shown specifically in FIG. **3**, it is understood that the embodiment of FIG. **3** includes one or more radar detection blocks such as radar detection block **67** of FIG. **2** to modify or inhibit outgoing transmissions from RF transmitters **106-110** for detected radar signals by one or more of RF receivers **118-122**. In one embodiment, for example, a radar detected on a radar receiver that receives ingoing communication signals from a specified area or direction would result in outgoing transmissions being inhibited that may interfere with such a signal. In an alternate embodiment, detection of a radar on any of the receive signal paths by any of the receivers **188-122** results in all outgoing transmissions on a radar frequency being inhibited. In yet another embodiment, only outgoing transmissions having a characteristic that may interfere with a radar of a specified characteristic are inhibited.

FIG. **4** is a diagram that illustrates the relative difference between a traditional radar signal waveform and an 802.11 wireless LAN waveform signal. Generally, it may be seen that radar signal pulses have a significantly higher magnitude than the 802.11 wireless LAN waveform signal. Additionally, radar pulses have a much shorter pulse width. In the example shown, each radar pulse has a 1 microsecond pulse width and is spaced apart by approximately 1 millisecond (though the figure is not to scale). The 802.11 wireless LAN waveform signal, in contrast, has a period that equals at least 40 microseconds and can equal 3 milliseconds in duration. Thus, the waveform of the radar pulses and the 802.11 wireless LAN signal are notably different, however, which facilitates detection by a radar detection block operable to detect traditional radar as disclosed herein.

Continuing to examine FIG. **4**, it may be noted that the radar pulses come in blocks. While 5 pulses per block are shown, it is understood that each block of pulses may have a different number of pulses. Generally, the radar pulses are in the 5.25-5.75 GHz frequency band having a 1 to 10 MHz bandwidth. The 802.11 frequency bands that are approximate to the frequency band of radar range from 5.15-5.35 MHz and from 5.725-5.825 MHz. Accordingly, it may be seen that an overlap exists between these two frequency bands for 802.11 with the frequency band for the radar pulses.

FIG. **5** is a diagram illustrating two groups (blocks) of pulses of a radar signal. Generally, it is a goal to detect a radar signal before a second group of pulses is received. Accordingly, as may be seen for the first group of pulses, a radar detection block, and more particularly, a state machine of the radar detection block in conjunction with a processor, must be able to detect and determine that a radar signal is present from the five pulses shown of the first group of pulses in FIG. **5**. As is understood, a common characteristic of radars is that the radar antenna oscillates or rotates thereby radiating any one point in space only for a limited time while the point in space is within a beam angle of the radar antenna. Accordingly, even though the radar continuously produces radar pulses, they are seen by the receiver in groups and then are not seen as the radar antenna sweeps away.

As may further be seen, a plurality of threshold levels is defined. These threshold levels are used by the state machine and the processor, in one embodiment, to determine that a traditional radar signal is present. The logic for concluding that a radar signal is present in relation to the pulses will be described in greater detail below. Generally, it may be seen that the first threshold level (TH_0), in one embodiment of the invention, is defined to be within the range of −80 decibels per meter (dBm). A second threshold (TH_1) is defined at −63 dBm.

The thresholds TH_0 and TH_1 are chosen in order to meet the requirements for radar detection sensitivity and to avoid false alarms and thus may be modified so long as this design goal is considered for a particular radar having known signal characteristics. In a first embodiment, absolute thresholds are used. The choice of TH_0 is made by first estimating the probability of detection and probability of false alarm for the expected environment. In an ideal environment (known radar signals in additive white Gaussian noise (AWGN) the computation is straightforward. However, in practice, the thresholds will are adjusted in the described embodiments of the invention in a dynamic fashion in order to maximize radar detection performance.

While FIGS. **4** and **5** are used to illustrate the relative difference traditional radar and an 802.11 WLAN signal, FIG. **6** illustrates the difference in signal length for WLAN signals, traditional radar signals, and non-traditional radar signals and is used to explain operational aspects of the various embodiments of the present invention. Specifically, it may be seen that the WLAN signal has a period that varies from 40 microseconds to slightly more than 3 milliseconds. A group of 5 traditional radar pulses are shown to approximately span a 4 millisecond period. The bin 5 non-traditional radar, however, may have a period as long as 12 seconds. As such, the mere use of signal length to detect non-traditional radar signals may result in false detections because OFDM signals may, when combined, appear long and may trigger false positives.

Generally, traditional existing radar signals comprise a series of short pulses. The new "bin 5" radar pulses, however, is more random, and can comprise, for example either a single 12 second pulse that shows up as a single pulse or in groups of three (4 seconds each). Thus, these bin 5 and other non-traditional radar pulses can be difficult to detect. Thus, the described embodiments of the invention contemplate the use of an FM demodulator to detect long pulses with linear FM modulation on it. As radar effectiveness may be improved by FM modulating the radar pulse, the use of a demodulator can identify that a long pulse may be a radar signal. Thus, we modify radar detector to detect longer pulses by increasing a FIFO buffer size among other changes and by including an FM demodulator to detect FM modulation. With such an arrangement, if no FM modulation is detected, as will be explained in greater detail below, the radar detection logic is operable to conclude that no non-traditional radar is present.

FIG. **7** is a diagram that illustrates the measurement of rise time and fall time of the pulses of the radar signal for both traditional and non-traditional radar pulses. More specifically, a time t_0 is defined as being when a rising pulse crosses the first threshold TH_0. A second time value t_1 is defined when the pulse crosses the second threshold TH_1. A third time period is defined, t_2, as being the time when a falling pulse crosses the TH_1 threshold. Finally, a fourth time is defined as t_3 whenever the falling pulse crosses threshold TH_0. By measuring the rise and fall times, the state machine and processor executed logic, in the described embodiment, may better determine whether a radar pulse was detected.

The logic portion performed by the processor may also be implemented with hardware such as application specific integrated computer logic, field programmable gate array logic, etc. These crossings of TH_0 and TH_1 enable a processor, state machine or other logic performing pulse detection operations to measure a rise time, a fall time, a pulse width and a total signal period. These measured signal characteristics make up what is referred herein also as pulse information that is entered within a table for evaluation to facilitate determination as to whether a radar signal is present. In one embodiment, more than two of the values of t0-t4 are used. In an alternate embodiment, the values of t1 and t2 are used to detect a pulse length as a part of radar detection logic.

FIG. **8** is a functional block diagram of a MIMO radio transceiver, and more specifically, of a receiver portion of a radar transceiver according to one embodiment of the invention. As may be seen, the transceiver **150** includes a plurality of receive paths shown generally at **154**, **158** and **162**. In one embodiment of the invention, transceiver **150** includes only two receive paths, namely, paths **154** and **158**. Each path **154-162** is similar in structure to the others of paths **154-162** and it should be understood, therefore, that a MIMO transceiver and the concepts relating to the present invention may be applied to a transceiver having any number of receive paths similar to receive path **154**. Because of the similarity of the multiple receive paths, only receive path **154** is described herein.

As may be seen, receive path **154** includes a receiver **166** that includes radio front end processing blocks that are operable to receive an RF signal from an antenna and to down-convert, amplify and filter the received signal and then to produce an ingoing digital signal that represents one of a baseband or intermediate frequency (IF) signal. In the described embodiment, therefore, receiver front end **166** produces a low frequency (baseband or IF) digital signal. While a single receive path is shown as a single ended path, it should be understood that many embodiments produce in-phase (I) and quadrature-phase (Q) signal paths that may be either single ended or differential for a receive signal path.

FIG. **8** further illustrates that the described embodiment of the invention includes a radar detection logic **170** for each receive signal path of the MIMO transceiver. The low frequency digital signal produced by receiver **166** is then produced to radar detection logic **170** and to signal processing block **174**. Radar detection logic **170** is operable to detect the presence of either a traditional or a non-traditional radar signal.

In the described embodiments of the invention, radar detection logic **170** comprises state logic and/or circuit based logic for measure rise and fall times of a pulse, or more generally, pulse lengths that are produced to radar signal processing logic. Generally, logic **170** includes circuitry and/or logic for detecting traditional radar signals as described herein. Further, in the described embodiment, radar detection logic **170** includes an FM demodulator that is operable to demodulate a frequency modulated signal and, more particularly, a continually increasing frequency signal to produce an indication that the received signal was frequency modulated with a continually increasing frequency signal. Thus, logic **170** is operable to detect non-traditional radar signals as well as the traditional radar signals having short pulses. In the digital realm, the continually increasing signal of an FM modulated signal is represented by a phase ramp wherein an output of the radar detection logic indicates an FM modulated signal was received if the output is substantially larger than zero. A non-FM modulated signal appears substantially as noise producing a near zero or zero value output. Radar signal processing logic within the signal processing block then evaluates the data produced by the radar detection logic **170** to determine the presence of a radar signal including the new non-traditional radar signal pulses such as what is known as a bin-5 radar signal.

FIG. **9** is a functional block diagram of a portion of a radio transceiver **200** according to one embodiment of the present invention. Initially, an RF signal received at an antenna is coupled to a low noise amplifier (LNA) **202**. LNA **202** produces amplified RF to mixers **204** and **206**. Mixer **204** mixes the amplified RF with a local oscillation to down-convert the

RF to a low frequency signal (one of a baseband frequency or intermediate frequency signal) to create a down-converted in-phase (I) channel signal. Similarly, mixer **206** mixes the received amplified RF signal with a phase-shifted local oscillation, wherein the phase is shifted by 90°, to produce a down-converted quadrature phase (Q) channel low frequency signal. Low pass filters **208** and **210** are coupled to receive the down-converted I and Q channel signals, respectively, to produce filtered I and Q channel signals to a pair of variable gain amplifiers **212** and **214**, respectively.

Variable gain amplifiers **212** and **214** further receive gain control signals from an 802.11(a) physical layer digital signal processor **216**. Responsive to the gain control from processor **216**, variable gain amplifiers **212** and **214** provide a corresponding amount of gain to the filtered I and Q signals and produce amplified I and Q signals to analog-to-digital converters **217** and **218**. Analog-to-digital converters **217** and **218** then convert the amplified I and Q signals to digital to produce incoming I and Q digital signal streams to processor **216**.

Radio transceiver **200** of FIG. **9** further includes a radar detection block **220** that is coupled to receive the incoming I and Q digital signal streams to detect the presence of a radar signal (traditional and non-traditional such as bin-5). Upon detecting the presence of a radar signal, radar detection block **220** produces control signals to processor **216** to prompt processor **216** to suspend communications over frequency bands that overlap with the radar frequency bands or that may interfere with the detected radar signal.

The operation and structure of radar detection block **220** is described in greater detail below. Generally, however, the radar detection block in this example provides at least received signal data to enable radar detection processing logic within processor **216** to determine whether a radar signal is present. Alternatively, radar detection block **220** includes logic and is operable to make the determination whether a radar signal is present and is further operable to provide the control signal to the processor **216** to inhibit transmissions. It should be further understood that the operation of FIG. **9** illustrates operation of just one receive signal path though the teachings of FIG. **9** may readily be applied in a MIMO transceiver to each receive signal path.

FIG. **10** is a block diagram of a radar detector block for use in an 802.11(a) receiver that may be within a traditional transceiver or within a MIMO transceiver according to one embodiment of the invention. The 802.11(a) receiver as shown in FIG. **9** that includes radar detection block of FIG. **10** is a direct conversion type receiver, although the invention is applicable to a super-heterodyne receiver as well. Both direct conversion and super-heterodyne topologies are commonly used for 802.11 type wireless LANs.

The inputs to the radar detection block of FIG. **10** are the outputs of the analog-to-digital converters (ADCs) that are tapped off and produced to the radar detection circuit (as shown in FIG. **8**, for example). The input signals produced by the ADCs are digital signals that are sampled at a sufficient rate and with a sufficient number of bits to facilitate use for radar detection. For example, a 40 MHz sampling rate at 8 bits of precision is adequate to detect radar systems in an 802.11 (a) environment.

Radar detection block **220** of FIG. **10** is operably coupled to receive the incoming I and Q digital signal streams produced by ADC **217** and ADC **218** of FIG. **9**. As may be seen in FIG. **10**, the incoming I and Q digital signal streams are received by mixers **222** and **224**. Mixers **222** and **224** are operatively coupled to receive each of the incoming I and Q digital signal streams twice to square each of the incoming I and Q digital signal streams. In one embodiment of the invention, the mixers are Gilbert mixers that are operable to multiply the inputs (since the inputs are of approximate magnitudes). Accordingly, mixer **222** produces a squared I digital signal stream, while mixer **224** produces a squared Q digital signal stream. The squared I and Q digital signal streams are then produced to an adder **226** that sums the two squared signals to produce a summed I and Q squared signal stream to a switch **228**.

In a first position, the summed I and Q squared signal stream is produced to moving average filter **230** that calculates a moving average of the summed I and Q squared signal strean. Moving average filter **230** then produces a moving average value to decibel conversion block **232**, which converts the moving average value produced by filter **230** to decibel units.

Whenever switch **228** couples moving average filter **230** to adder **226**, a switch **238** couples the output of decibel conversion block **232** to a threshold comparison state machine **240**. Accordingly, the moving average, in decibels, is produced to threshold comparison state machine **240** for analysis as will be described below. Whenever switch **228** couples adder **226** to a decibel conversion block **234**, however, the summed I and Q squared signal stream is produced to decibel conversion block **234** which produces the summed I and Q squared signal stream in decibels to a subtractor **236**. Subtractor **236** is further coupled to receive and subtract a receiver gain setting from the summed I and Q squared signal stream in decibels. The output of subtractor **236** is then coupled, by switch **238**, to threshold comparison state machine **240**. Threshold comparison state machine **240** operates as described below to provide preliminary analysis of the detected power levels produced either by decibel conversion block **232** or subtractor **236** to a processor **242**. Radar detection logic **244** within processor **242**, then analyzes the preliminary analysis received from threshold comparison state machine **240** to determine whether a radar signal has been received.

This circuit of FIG. **10** computes the received power and applies either no filtering (option **1** in which both switches are in the low position) or a moving average filter (option **2** in which both switches are in the upper position). Option **1** is most effective for short pulse width radars when no interference is present. Option **2** is most effective with longer radar pulses in interference that looks random as is shown in FIG. **10**.

FIG. **10** is a functional block diagram of a radar detection block operable to detect a traditional radar signal for a variety of signal waveforms including traditional radar pulses and 802.11(a) signals. In general, the radar detection block will not have prior information concerning either the radar pulse width or interference. Consequently, in the described embodiment, logic drives switches **428** and **438** to the lower position (option **1**) unless an 802.11(a) frame is being received (as determined during call setup signaling between an access point and a wireless host or communication device in one embodiment of the invention). In the case of 802.11(a) communications, option **2** is employed (the switches are toggled to the upward position as shown) during the duration of the frame.

When option **2** is employed during a received 802.11(a) frame, the thresholds are set to be relative to the average received power. Since the radar signal is typically a constant envelope signal, while the interference is more like Gaussian noise, the moving average filter will have the effect of improving the radar signal to interference power ratio by a factor of the square root of the filter length. The improvement is limited by the length of the radar pulse (i.e., maximum

improvement is when the radar pulse fills the moving average filter). Thus, the threshold level and filter length are jointly selected based on the expected radar pulses length and the detection and false alarm probabilities.

FIG. **11** is a functional block diagram of a moving average block as employed in one embodiment of the present invention. The moving average filter effectively is an integrator and can improve the radar signal to interference level for many types of radar signals. In the described embodiment, four delay elements **246** are included coupled in series and having outputs that are further produced to an adder. A summed output from the adder is then produced to a divide by "N" block **248**. The value of "N" in the divide-by-N block is equal to four in the described embodiment since there are four delay elements. The number of delay elements and the divisor "N" may each be modified according to particular requirements.

If it is assumed that the radar signal has a constant envelope, the I and Q components then take the form:

$$I(n)=A_r\cos(\overline{\omega}_r nT+\phi)$$

$$Q(n)=A_r\sin(\overline{\omega}_r nT+\phi)$$

where A_r, the radar signal amplitude, and ω_r, the down-converted radar signal frequency, are constant (or approximately constant) during the radar pulse. The radar signal is zero outside of the received pulse. In constrast, the received 802.11(a) signal can be modeled as two Gaussian signals:

$$I(n)=G_i(n)$$

$$Q(n)=G_q(n)$$

The moving average filter of length n computes the following:

$$y=\sum_{i=1}^{k} I_i^2+Q_i^2$$

With an input signal that is composed of a radar signal embedded within an 802.11(a) frame, the output of the moving average filter is:

$$I(n)=A_r\cos(\overline{\omega}_r nT+\phi)+G_i(n)$$

$$Q(n)=A_r\sin(\overline{\omega}_r nT+\phi)+G_q(n)$$

$$y=\sum_{i=1}^{k} A_r^2(\cos^2(\varpi_r iT+\varphi)+\sin^2(\varpi_r iT+\varphi))+$$

$$A_r\cos(\varpi_r iT+\varphi)G_i(i)+G_i^2(i)+A_r\sin(\varpi_r iT+\varphi)G_q(i)+G_q^2(i)$$

$$y=kA_r^2+\sum_{i=1}^{k} A_r\cos(\varpi_r iT+\varphi)G_i(i)+G_i^2(i)+A_r\sin(\varpi_r iT+\varphi)G_q(i)+G_q^2(i)$$

With the radar and signal model given above, y has a non-central chi-square distribution with 2 k degrees of freedom. Thus, the relative error in the measurement of y is given by:

Relative Error=(standard deviation of y)/(mean of y)

$$=\frac{\sigma_y}{m_y}=\frac{\sqrt{4k\sigma_{wkan}^4+4kA_r^2\sigma_{wkan}^2}}{2k\sigma_{wkan}^2+kA_r^2}$$

which decreases by a factor of the square root of k with increasing k.

FIG. **12** illustrates a threshold comparison state machine. This device measures the time instants when the radar pulse crosses two thresholds. The output takes the form of 4 time measurements: start time (T_0), rise time (T_1), pulse width (T_2), and fall time (T_3). A set of the 4 time measurements is recorded for every complete cycle back to start.

The state machine operates as follows. It originates in the start state and observes the incoming power estimate P. When P exceeds threshold P_0, the start time (T_0) is recorded and the state is advanced to Rising**0**. Once in Rising**0**, a counter is initiated to record the total time in that state (T_1). If the incoming power estimate drops below P**0**, then the state machine is reset and it returns to Start.

When P exceeds the second threshold, P_1, the state machine advances to state Rising**1**. The time it spends in this state is recorded in T_2. When P drops below P_1, the state machine advances to Falling**0**. The time in this state is recorded in T_3. If, while in the Falling**0** state, P rises back up to P_1, then the state machine returns to the Rising**1** state. T_2 is then incremented by the contents of T_3 and T_3 is reset. This process of moving back and forth between the Rising**1** and Falling**0** states can happen multiple times. After P drops below P_0, the state machine returns to Start and the complete set of 4 time measurements are forwarded to the processor.

The final radar detection decision is made by a programmable processor as shown in the embodiment of FIG. **8**. In the embodiment of FIG. **9**, however, the final radar detection decision may be made either in the processor or in radar detection block **220**. Referring again to FIG. **10**, processor **242**, and more particularly, radar detection logic **244**, periodically reviews the pulse data collected by the state machine **240**, and compares it with the characteristics of known traditional radar signals. One key characteristic for determining radar presence, however, is the pulse repetition frequency. Thus, the processor is operable to match multiple received pulses with the same relative spacing. When a sequence of this type is observed, detection is declared. Otherwise, the pulse data is discarded, and the processor waits for new data. This multi-layer approach helps minimize false detections of traditional radar signals while maximizing the chances that actual radars are detected.

In the described embodiment of the invention, a processor receives the output of the state machine and logic defined therein (in radar detection block **244** of FIG. **10**, for example) analyzes the output of the state machine to determine whether a radar signal has been received. It should be understood that the following logic, as defined in block **244** and executed by processor **242**, may readily be formed in hardware as described before.

FIG. **13** is a flowchart that illustrates a series of steps that are performed according to one embodiment of the invention that are used for tracking radar, especially traditional radar. Generally, the invention includes measuring signal characteristics to determine if a received signal has a characteristic of a radar pulse and to further determine whether a pattern of pulses is consistent with a radar pattern. More specifically, the invention includes determining whether a received signal has exceeded a first threshold (step **250**) and, when the first threshold is exceeded, a timer is initiated to track or measure a rise time (step **252**). The time is turned off and the rise time is determined when the rising signal crosses a second threshold. Thus, the invention includes determining that the received signal has crossed (the second threshold (step **254**).

The embodiment of the invention further includes determining a pulse width. Thus, once the second threshold has been reached, the invention includes initiating a second timer to measure an amount of time above the second threshold (and therefore the pulse width) (step **256**). The embodiment of the invention further includes determining a received sig-

nal has fallen below the second threshold (step **258**). The difference in time between the two crossings of the second threshold define the pulse width of a received signal. If the second timer is initialized to start counting from zero, the value of the second timer represents the pulse width. In one embodiment, this pulse width is a key characteristic in determining whether a traditional radar signal has been received though, in an alternate embodiment, may also be used for determining whether a non-traditional radar has been received.

Once the second threshold is crossed in a downward position, meaning the received signal levels has crossed from above to below the second threshold, a third timer is initialized to track a fall time (step **260**). Once the signal crosses the first threshold in the downward direction, the third timer is stopped and the fall time is determined (step **262**), which fall is the time required for the signal level to fall from the second to the first threshold. Accordingly, the invention further includes producing first, second and third timer values to logic for determining whether a radar pulse has been received (step **264**). Finally, if a radar pulse has been received, the method of the embodiment of the invention includes stopping all transmissions in frequency bands that overlap with radar frequency bands (step **266**).

FIG. **14** is a flowchart illustrating a method for determining whether a radar signal is present according to one embodiment of the invention. For the described embodiment, it is assumed hardware of a radio receiver is continually filling a first in/first out (FIFO) with the pulse information. Moreover, in the described embodiment of the invention, the inventive method is repeated at periodic intervals of less than one second.

Initially, the invention includes receiving and detecting incoming pulses and placing the pulse information in a FIFO register to detect a traditional radar signal presence (step **270**). Detecting the incoming pulses includes measuring pulse characteristics such as rise time, pulse width and fall time. Thereafter, the invention includes producing pulse information to a processor and clearing the FIFO (step **272**). Generally, this step includes loading pulse data (pulse information) into the programmable processor (in the described embodiment) or other logic. In one embodiment, the pulse data is loaded by direct transfer such as by direct memory access (DMA).

After the pulse data is loaded, a table of pulse data is generated for a series of pulses (step **274**). If the total number of pulses is less than a specified number, processing is suspended (stopped) until the specified number of pulses is listed within the table (step **276**). In addition to adding pulse data to the table, the embodiment of the invention includes removing pulse information from the generated table for any pulse having a pulse width less than a specified minimum width amount and greater than a specified maximum width amount (step **278**). In an alternate embodiment, pulse data is only placed within the table for further analysis if the pulse width is within a specified range for a given pulse. Accordingly, for this embodiment, the step of removing pulse data for such a pulse is unnecessary. In either embodiment, however, pulses that are either too long or too short to be a radar pulse are removed from the table of pulse data entries. Typical radar systems have pulses with a pulse width in the range of one to three microseconds.

The embodiment of the invention further includes determining whether a total number of pulses is less than a specified number and, if so, stops further processing until the table has pulse data for a specified number of pulses (step **280**). In one embodiment of the invention, the specified number is equal to six. Thereafter, the invention includes grouping a plurality of pulse data entries to enable detection of a specified radar pulse (step **282**).

In the described embodiment, the group of pulses are grouped by time. More specifically, a nominal value of 210 milliseconds is used to group pulses. In the very specific embodiment, such a grouping is referred to as an epoch. The epoch or group length is set to be long enough to perform radar detection processing (step **284**) and to cover the burst lengths sufficiently long to detect desired radar systems. This step takes advantage of a radar characteristic of radar systems of pulses being transmitted and arriving in bursts. Although it is not known exactly how long the bursts will be for a radar, the nominal value of 210 milliseconds should be adequately long to facilitate identifying a received radar signal. Finally, if a radar pulse has been received, the invention includes inhibiting or stopping transmission in frequency bands that overlap with radar frequency bands (step **286**).

FIG. **15** is a flowchart of a method for performing radar detection processing for a traditional radar signal. In some cases, it is expected that a valid radar signal may not be detected due to interference with one or more pulses. Accordingly, the group of pulses for which no radar was detected is evaluated for a missing pulse. Thus, for the grouped plurality of pulse information entries (epoch), the invention includes generating a first list of pulse repetition intervals by subtracting a start time for a given pulse from a start time for an immediately preceding pulse for each pulse in the group (step **290**). It is understood, of course, that this step cannot be performed for the first pulse.

Thereafter, the invention includes quantizing pulse repetition intervals with a specified granularity (step **292**). Generally, received pulse data has a degree of resolution that is not necessary and may result in false determinations regarding radar detection conclusions. In one embodiment of the invention, the data is quantized to a resolution of 25 milliseconds and a smallest incremental value. Thereafter, the invention includes removing all pulses not having a pulse repetition interval value within a specified range (step **294**). If the total number of pulses is less than a specified number (six in the described embodiment) the process is stopped and is repeated for a subsequent grouped plurality of pulse information entries (step **296**).

Once a group of pulses (epoch in the described embodiment) contains a group of pulses that is equal to or exceeds the specified number of required pulses (six in the described embodiment), the invention includes determining (by counting) which pulses have the most common and second most common pulse interval values in the group of pulse information entries (step **298**). The method further includes determining if a total number of most common pulse interval values is greater than or equal to the specified number and therefore determining that a radar pulse has been detected (step **300**). If the pulse train (group of pulses) does not suggest radar presence, the invention includes examining the pulse train to determine if the pulse train is missing a radar pulse (step **302**). The specific steps for determining that a radar is present notwithstanding a missing pulse is illustrated in relation to FIG. **16**.

If analysis of the pulse train for missing radar pulses does not suggest radar presence, the invention includes examining the pulse train to determine if the pulse train includes an extra radar pulse (step **304**). If a radar pulse is detected in any one of the prior steps, the invention further includes suspending transmission in overlapping frequency bands and classify radar by comparing frequency of pulses from first list of pulse repetition intervals to known radar signals (step **306**). Finally,

the invention includes continuing monitoring for radar and, once a radar signal is determined to not be present, resuming transmission of communication signals in overlapping frequency bands (radar bands) (step **308**).

FIG. **15** illustrated a method for determining whether a radar signal is present and whether transmissions in overlapping frequency bands should be suspended. Within the steps of FIG. **15**, there are two steps for determining whether a radar is present even if a pulse is missing (for example, due to interference) or if there is an extra pulse (for example, due to spurious noise or other noise source) in steps **304** and **306**, respectively. Each of these two steps, however, further includes a series of steps for determining the same.

FIG. **16** is a flowchart that illustrated a method for performing radar detection processing for missing pulses according to one embodiment. Referring now to FIG. **16**, the method includes evaluating whether a 2*pulse interval of a most common pulse interval value is equal to a pulse interval of a second most common pulse interval value (step **310**). Additionally, the invention includes evaluating whether the 2*pulse interval of the second most common pulse interval value is equal to the pulse interval of the most common pulse interval value (step **312**). Also, the invention includes determining if the total number of most common and second most common pulses is greater than the specified number (step **314**). Finally, the invention includes determining that a radar pulse is present if any of the above three steps are true (step **316**). Generally, if any of these steps yields a true result, then a radar is present and detectable even if interference prevents receipt of a radar pulse.

FIG. **17** is a flowchart illustrating a method for performing radar detection processing for extra pulses according to one embodiment. A type of interference that may interfere with radar detection for traditional radars is the introduction of a signal that appears to be a pulse. Thus, referring now to FIG. **17**, an embodiment of an inventive method includes performing analysis for determining a radar signal is present even in the presence of an extra signal appearing as a pulse. More specifically, the invention includes for a grouped plurality of pulse data entries, generating a second list of pulse repetition intervals by subtracting a start time for a given pulse from a start time for a pulse preceding an immediately preceding pulse (step **318**). Thereafter, the pulse repetition intervals are quantized with a specified granularity (step **320**). The invention further includes removing all pulses not having a pulse repetition interval value within a specified range (step **322**). The remaining pulse intervals of a first list of pulse repetition intervals are then compared to the second list of pulse repetition intervals (step **324**). Finally, the invention includes evaluating whether if pulse periods match from the comparison, and if the total number of pulses in the second list of pulse repetition intervals is greater than a specified number, determining whether a radar is present (step **326**).

In an alternate embodiment of the invention, an FM demodulator is used in a radar detection circuit. The FM demodulator is particularly helpful in detecting so called "Bin **5**" radars which are less predictable and have longer lengths than other forms of radar. In yet another embodiment, a combination of the various radar circuits disclosed herein are jointly employed to maximize the detection of radar signals. Both FIGS. **16** and **17** relate, generally, to traditional radar signals.

FIG. **18** is a functional block diagram of one embodiment of the invention of radar detection circuitry for detecting non-traditional radar pulses. Generally, the non-traditional radar pulse is characterized by a relatively long period as discussed in relation to FIG. **6** above. While the approach for detecting a radar pulse includes measuring pulse lengths as described before by detecting crossings of specified threshold signal strength/magnitudes (e.g., time between t**1** and t**2** of FIG. **7**) could be used to detect a non-traditional radar pulse having a long period (e.g., 100 micro-seconds or more), it is possible that a false positive could result from an orthogonal frequency division multiplexing (OFDM) signal especially if, for some reason, the receiver is not aware that an OFDM signal is being received. Thus, it is possible that the receiver will not accurately distinguish between an OFDM or non-traditional radar signal by merely analyzing a received signal for a long pulse.

If an OFDM signal is processed by an FM demodulator, however, the output appears as random noise. A non-traditional radar signal (e.g., bin-5 radar) that is processed by an FM demodulator, however, produces a linear ramp as an output because frequency increases at a constant rate for the non-traditional radar signal. Typically, the radar pulse initially is characterized by a low frequency offset and increases in frequency at a constant rate over course of pulse. Thus, a rudimentary FM demodulator may be used to detect the non-traditional radar. By averaging the signal, the output of the FM demodulator will be substantially equal to zero without a signal that continually increases in frequency to produce a phase ramp in the digital realm. For a signal that generates a digital phase ramp, however, averaging the signal still results in an output having a substantially large output value to enable the receiver to determine that radar was received.

More specifically, a linear frequency modulated signal has the form:

$$y(t) = e^{j2\pi(f_0 t + \phi(t))}$$

$$\phi(t_0) = \int_0^{t_0} kt\,dt = \frac{kt_0^2}{2}$$

wherein K is the modulation in Hz/second, and f**0** is the carrier frequency in Hz. For a received signal y(t), K can be found by multiplying the conjugate of derivative of y(t):

$$y(t)\left(j\left(\frac{d}{dt}y\right)^*\right) = e^{j2\pi(f_0 t+\phi(t))}(j)\left(\frac{d}{dt}j2\pi(f_0 t+\phi(t))\right)^* e^{-j2\pi(f_0 t+\phi(t))}$$

$$= 2\pi\left(f_0 + \frac{d\phi(t)}{dt}\right)$$

$$= 2\pi(f_0 + kt)$$

For a real value of k, the expression may be written as:

$$y(t) = i(t) + jq(t)$$

$$\mathrm{Re}\left[y(t)\left(j\frac{d}{dt}y\right)\right] = i(t)\frac{dq(t)}{dt} - q(t)\frac{di(t)}{dt}$$

In a sampled system, the differential signals may be expressed as:

$$\mathrm{Re}\left[y(n)\left(j\frac{dy(n)}{dt}\right)\right] \approx i(n)\frac{q(n)-q(n-1)}{\Delta t} - q(n)\frac{i(n)-i(n-1)}{\Delta t}$$

$$= \frac{1}{\Delta t}[q(n)i(n-1) - i(n)q(n-1)]$$

The expression for the real part of the signal, therefore, may be implemented with an architecture shown in FIG. **18**.

Thus, a radio receiver **350** includes baseband filtering circuitry **352** that produces a stream of digital in-phase and quadrature phase signals (I_N and Q_N) that are produced to two circuit blocks that operate in a parallel manner. Specifically, the digital signals on the I and Q branches are produced to I and Q path shift registers **368** and **370** to provide a gain adjustment by way of right shifts to the FM demodulator that is operably coupled downstream of the shift registers. The digital signals on the I and Q branches are also produced to a block that is operable to measure a power level of the received signal.

Specifically, the signals one the I and Q branches are produced to a pair of inputs for each of a pair of multipliers **354** and **356** which produce a square of each signal to a summing block **358**. The output of the summing block is therefore a sum of the I and Q signals squared. The output of summing block **358** is then produced to a moving average filter **360** that produces a moving average for a specified number of samples to a LOG_2 block **362**. The output of block **362** is then produced to a summing block **364** that is operable to subtract a specified offset value. The output of the summing block **364** is then produced to the shift registers **368** and **370** that provide necessary gain adjustments to scale a signal to a manageable value for downstream circuitry.

Threshold compare block **366** is operably coupled to receive the output of summing block **358** as well and produces threshold crossing values to a downstream processor or radar detection logic that measures pulse lengths. In relation to a similar structure described previously for detecting traditional radar pulses, the downstream radar detection logic defines a larger FIFO buffer in one embodiment for storing the outputs of threshold compare block **366** to determine pulse lengths in relation to a FIFO buffer used for storing threshold values used only for detecting traditional radar signals. The reason a larger FIFO buffer is used in one embodiment is that the longer pulse widths of the non-traditional radar signals required a larger FIFO for adequate resolution.

Referring back to FIG. **18**, the in-phase and quadrature-phase outputs of the shift registers **368** and **370** are produced to delay elements **372** and **374**, respectively, and to cross-coupled multipliers **378** and **376**, respectively. Cross-coupled multipliers **376** and **378** are also coupled to receive a delayed output of delay elements **372** and **374** respectively. As such, multiplier **376** receives q(n) and i(n−1) to produces q(n)*i(n−1). Multiplier **378** receives i(n) and q(n−1) to produce i(n)*q(n−1). The output of summing block **380**, which is operable to invert the sign of the output of multiplication block **378**, is equal to q(n)*i(n−1)−i(n)*q(n−1), which output is defined above in equation (9). The output is then averaged over a specified number of samples (approximately 30 in the described embodiment) by moving average block **382**. Generally, an OFDM signal results in an average signal magnitude value of zero or a very small number near zero. Thus, moving average block **382** is operable to reduce erroneous conclusions based upon a signal spike or an increased noise signal.

FIG. **19** is a flow chart that illustrates operation of a radio receiver according to one embodiment of the invention. The method includes initially producing I and Q digital waveform signals from a baseband filtering block (step **400**). Thereafter, the method includes producing a gain control signal and adjusting a gain of a signal that is to be FM demodulated (step **402**). The step of producing a gain control signal includes, in one embodiment, squaring each of the in-phase and quadrature-phase signals and summing the squared signals, filtering to generate a moving average of the sum, taking a log of the moving average value and subtracting an offset. A shift register then performs a right shift based upon the gain control signal. Other methods for generating a gain control signal may be used. Generally, however, a desired result is to reduce or increase a gain of a signal produced to an FM demodulator to produce a signal to the FM demodulator having a magnitude within a specified range defined at least in part by capabilities of downstream components.

The subsequent step is to FM demodulate in-phase and quadrature-phase digital waveform signals (step **404**). In the described embodiment, a simple demodulator is used that primarily provides an output that reflects whether an input signal was FM modulated. As described before, an FM modulated signal produces a phase ramp in the digital domain which phase ramp may be used to identify the presence of a frequency modulated radar. The FM demodulated signal is then averaged (step **406**) and evaluated to determine the presence of a non-traditional radar signal (step **408**).

FIG. **20** is a flow chart that illustrates a method for detecting traditional and non-traditional radar signals according to one embodiment of the invention. The method includes, for at least one of a plurality of receive signal paths, receiving a traditional radar signal (step **420**). Thereafter, the method includes performing traditional radar signal processing and detecting the presence of the traditional radar signal (step **422**). In addition, the method includes for at least one of a plurality of receive signal paths, receiving a non-traditional signal (step **424**). The method also includes FM demodulating the non-traditional radar signal and averaging the FM demodulated non-traditional radar signal (step **426**). Finally, the method includes evaluating the averaged FM demodulated signal to determine presence of a non-traditional radar signal (step **428**). It should be understood that the method of FIG. **20** is a high level description of the method and that other described steps may be included as well.

While the invention is susceptible to various modifications and alternative forms, specific embodiments thereof have been shown by way of example in the drawings and detailed description. It should be understood, however, that the drawings and detailed description thereto are not intended to limit the invention to the particular form disclosed, but, on the contrary, the invention is to cover all modifications, equivalents and alternatives falling within the spirit and scope of the present invention as defined by the claims. As may be seen, the described embodiments may be modified in many different ways without departing from the scope or teachings of the invention.

What is claimed is:

1. A radio transceiver, comprising:

radio from end circuitry operable to produce an ingoing communication signal having in-phase and quadrature-phase components on one or more receive signal paths;

analog-to-digital converter (ADC) operatively coupled to receive the ingoing communication signal, the ADC producing an ingoing digital signal having digital in-phase and quadrature-phase signal components;

one or more processors for processing the ingoing digital signal, wherein the one or more processors inhibit transmission of outgoing digital signals over frequency bands overlapping with radar frequency bands in response to detection of a traditional radar signal or in response to detection of a non-traditional radar signal;

a radar detection block operably disposed within each of the one or more receive signal paths to receive the ingoing digital signal and operable to detect presence of the

traditional radar signal and the non-traditional radar signal in the ingoing digital signal, wherein the radar detection block:

detects presence of the traditional radar signal in the ingoing digital signal by detecting pulses having a period that corresponds to traditional radar signals; and

detects presence of the non-traditional radar signal in the ingoing digital signal by detecting pulses having a period that is substantially greater than pulses for traditional radar signals and by determining that the detected pulses having a period that is substantially greater than pulses for traditional radar signals are frequency modulation (FM) modulated.

2. The radio transceiver of claim **1**, wherein each radar detection block is operable to:

receive a series of incoming pulses; produce pulse data to a FIFO; generate a table of pulse data for a series of pulses;

evaluate the pulse data within the table to remove pulse data for pulses that do not satisfy specified traditional radar pulse characteristics;

group a plurality of pulse data within the table into groups of a specified size; and perform radar detection processing.

3. The radio transceiver of claim **1** wherein the radio transceiver suspends radar detection processing whenever a total number of pulses within the table is less than a specified number.

4. The radio transceiver of claim **3** wherein the specified number is equal to six.

5. The radio transceiver of claim **3** wherein the radio transceiver resumes processing whenever the total number of pulses is greater than or equal to the specified number.

6. The radio transceiver of claim **1** wherein the radar detection block measures signal magnitude crossings of a plurality of thresholds and determines a rise time from a first to a second threshold, time above the second threshold, and a fall time from the second to the first threshold.

7. The radio transceiver of claim **6** wherein the radar detection block monitors at least one of a magnitude, a pulse width and timing and timing relationships of received pulses to determine whether a radar pulse has been received.

8. The radio transceiver of claim **7** wherein the radar detection block comprises a state machine for determining whether the received pulse has a specified characteristic of a radar pulse.

9. The radio transceiver of claim **7** wherein the radar detection block produces a control signal that is set to a specified logic state whenever the radar signal has been detected.

10. The radio transceiver of claim **1** further including an FM demodulator that is used to determine whether a radar signal is present.

11. The radio transceiver of claim **10** further including a gain adjustment circuit that adjusts a gain of the ingoing digital signal prior to demodulating the ingoing signal to determine if a non-traditional radar is present.

12. The radio transceiver of claim **11** further including circuitry to square and then sum the digital in-phase and quadrature phase signal components.

13. The radio transceiver of claim **12** further including gain control determination circuitry which further includes first moving average filter block for determining a moving average of the squared and summed digital in-phase and quadrature-phase signal components.

14. The radio transceiver of claim **13** wherein the gain control determination circuitry further includes a logarithmic function block for applying a log function to the output of the first moving average filter.

15. The radio transceiver of claim **14** further including a summing circuit for summing the output of the logarithmic function block with a specified offset, wherein the output of the summing circuit operates to set a gain control signal for the gain adjustment circuit for producing a gain adjusted ingoing digital signal having digital in-phase and quadrature-phase signal components.

16. The radio transceiver of claim **15** wherein the FM demodulator FM demodulates the gain adjusted ingoing digital signal having digital in-phase and quadrature phase signal componems.

17. A multiple input multiple output (MIMO) radio transceiver, comprising:

a first receive path comprising radio from end circuitry operable to produce a first ingoing digital signal;

first radar detection block operably disposed to receive the first ingoing digital signal to detect presence of a radar signal and to inhibit transmission of outgoing digital signals over frequency bands overlapping with radar frequency bands in response to detection of the radar signal;

a second receive path comprising radio from end circuitry operable to produce a second ingoing digital signal;

second radar detection block operably disposed to receive the second ingoing digital signal to detect presence of the radar signal and to inhibit transmission of outgoing digital signals in response to detection of the radar signal; and

wherein the first and second radar detection blocks each comprise logic for detecting traditional radar signals and non-traditional radar signals, wherein the first and second radar detection blocks are operable to detect presence of the non-traditional radar signal by detecting a pulse with a pulse period that is substantially longer than a traditional radar signal and having FM modulation.

18. The MIMO radio transceiver of claim **17** wherein the first and second radar detection blocks each further comprise logic for detecting non-traditional radar signals wherein the logic includes an FM demodulator for determining whether a pulse has been frequency modulated.

19. The MIMO radio transceiver of claim **18** wherein the non-traditional radar signals are bin 5 radar signals.

20. The MIMO radio transceiver of claim **17** wherein the first and second radar detection blocks each further comprise logic that functionally are operable to FM demodulate the ingoing digital signals to detect non-traditional radar signals.

21. A radio transceiver, comprising: a first receive signal path operable to produce an ingoing signal; a baseband processor operably disposed to receive the ingoing signal to process the ingoing signal and to inhibit transmission of outgoing digital signals over frequency bands overlapping with radar frequency bands in response to detection of a non-traditional radar signal;

a first radar detection circuit operable to receive the ingoing signal and to determine whether a non-traditional radar signal is present by determining whether the ingoing signal has a period that corresponds to a non-traditional radar signal and is FM demodulated, wherein the first radar detection circuit further includes:

FM demodulation circuit operably disposed to receive the ingoing signal, to FM demodulate the ingoing signal and to determine whether the FM demodulated ingoing signal is characterized by a specified gain characteristic based on a continually increasing frequency of the non-traditional radar signal.

22. The radio transceiver of claim 21 wherein the specified gain characteristic includes a ramped response over time with an increasing gain level.

23. The radio transceiver of claim 21 further including a gain control block to set a digital gain of the FM demodulation circuit.

24. The radio transceiver of claim 21 further including a shift register for operatively implementing gain level settings as shifts.

25. The radio transceiver of claim 21 wherein the FM demodulator comprises delay elements and cross coupled multipliers and a summing node operatively coupled to sum outputs of the multipliers.

26. The radio transceiver of claim 25 further including a moving average block for producing a moving average of a specified length of the output of the summing node wherein characteristics of the output of the moving average block indicates the presence of the non-traditional radar signal.

27. A method of detecting a non-traditional radar signal, comprising:

producing I and Q digital waveform signals from a baseband filtering block; producing a gain control signal;

FM demodulating the I and Q digital waveform signals based in part upon the gain control signal;

averaging the FM demodulated I and Q digital waveform signals; and

evaluating the averaged FM demodulated I and Q digital waveform signals to determine presence of a non-traditional radar signal; and

inhibiting transmission of outgoing digital signals over frequency bands overlapping with radar frequency bands in response to detection of the non-traditional radar signal.

28. The method of claim 27 wherein producing the gain control signal includes summing a square of the I and Q digital waveform signal and determining a moving average of the summed square of the I and Q digital waveform signals.

29. The method of claim 28 further including calculating a log of the moving average.

30. The method of claim 29 further including summing the log of the moving average with an offset to produce a gain control signal.

31. The method of claim 27 further comprising detecting a traditional radar signal when a traditional radar signal is present having traditional radar characteristics comprised of relatively short period pulses and detecting the non-traditional radar signal having a relatively long pulse period.

32. The method of claim 31 wherein the non-traditional radar signal is a bin-5 radar signal.

* * * * *

UNITED STATES PATENT AND TRADEMARK OFFICE

CERTIFICATE OF CORRECTION

PATENT NO. : 8,190,162 B2
APPLICATION NO. : 11/415841
DATED : May 29, 2012
INVENTOR(S) : Christopher J. Hansen

It is certified that error appears in the above-identified patent and that said Letters Patent is hereby corrected as shown below:

In the Claims:

Col. 22, line 52, in claim 1: replace "radio from end" with --radio front end--
Col. 24, line 15, in claim 17: replace "radio from end" with --radio front end--
Col. 24, line 23, in claim 17: replace "radio from end" with --radio front end--

Signed and Sealed this
Sixteenth Day of July, 2013

Teresa Stanek Rea
Acting Director of the United States Patent and Trademark Office